CLA-VAL
AUTOMATIC CONTROL VALVES

52-03/652-03

Place this manual with personnel responsible for maintenance of this valve

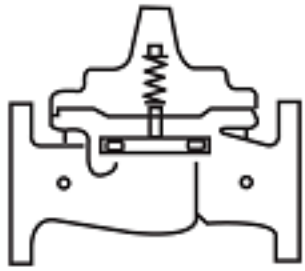

Installation

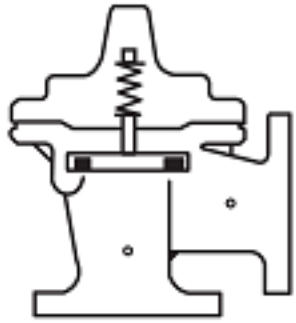

Operation

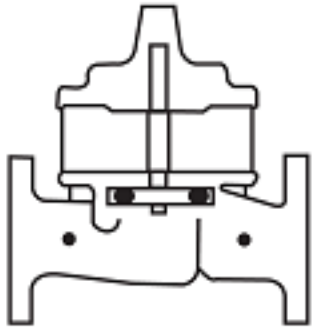

Maintenance

CLA-VAL

CLA-VAL • 1701 Placentia Avenue • Costa Mesa, CA 92627 • (949) 722-4800 • info@cla-val.com
CLA-VAL CANADA LTD. • 4687 Christie Drive • Beamsville, Ontario, LOR 1B4 Canada • (905) 563-4963
www.cla-val.com • info@cla-val.com

CLA-VAL CO. NEWPORT BEACH, CALIFORNIA

CATALOG NO.	DRAWING NO.	REV
52-03/652-03	90483	AA

TYPE OF VALVE AND MAIN FEATURES

SURGE ANTICIPATOR WITH X102 FLOW LIMITER (2 1/2" TO 16" SIZES FOR 52-03 & 4" TO 24" SIZES FOR 652-03)

DESIGN		
DRAWN	RW	9-12-80
CHK'D	KD	9-17-80
APV'D	CH	9-18-80

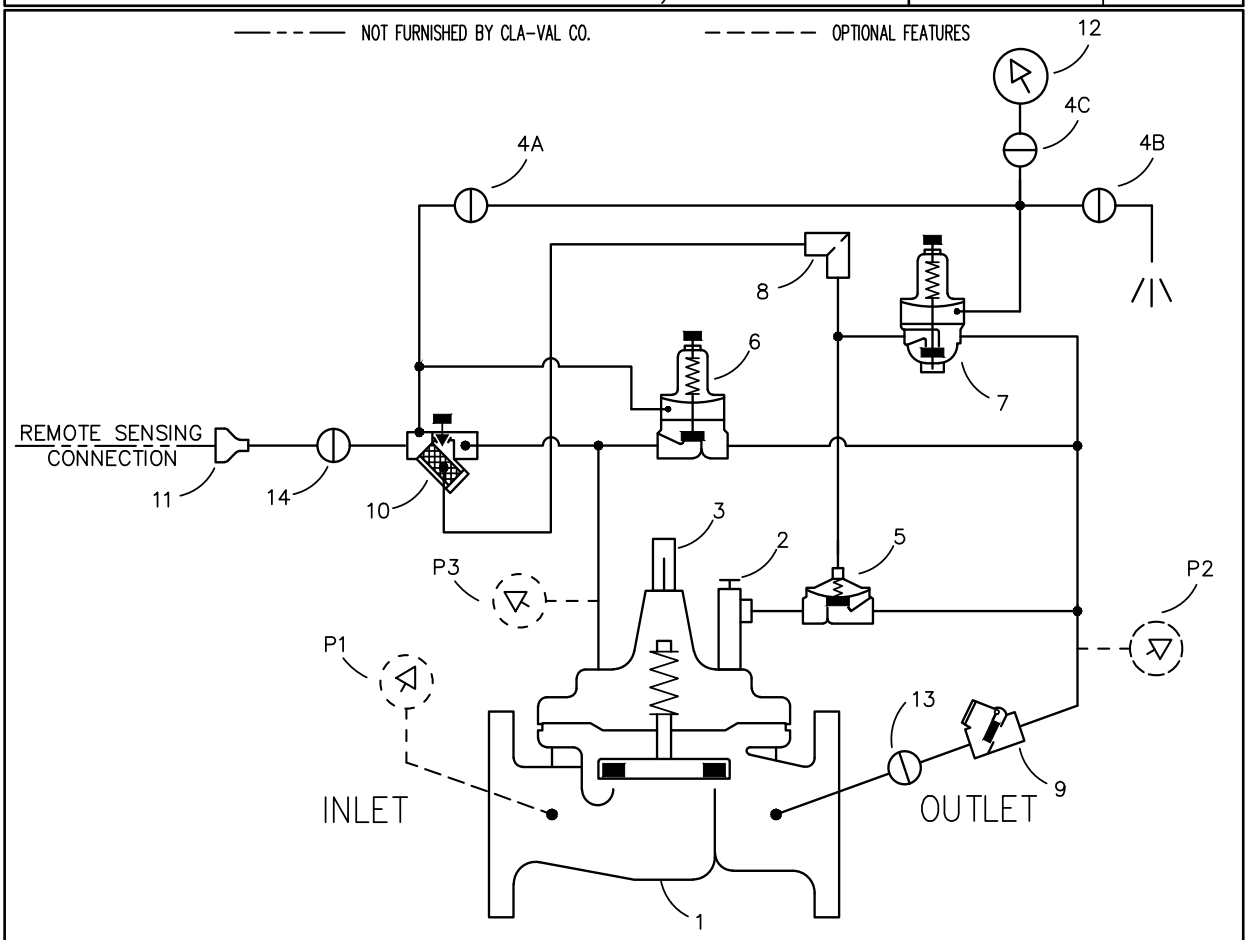

ASSEMBLY NOTE: USE BRACKET TO MOUNT ITEMS 4, 6, 7, 8.
* USE 100KN FOR ITEM 1 ON 4" & SMALLER SIZES
** USE 100-20KN FOR ITEM 1 ON 6" & SMALLER SIZES
*** INSTALL ITEM 2 IN CENTER COVER BOSS: ON 4" & SMALLER SIZES FOR 52-03,
ON 6" & SMALLER SIZES FOR 652-03,

ITEM NO.	BASIC COMPONENTS	QTY	ITEM NO.	BASIC COMPONENTS	QTY
1	* 100-01 HYTROL (52-03) MAIN VALVE	1	8	X58B RESTRICTION TUBE ASSEMBLY	1
	** 100-20 HYTROL (652-03) MAIN VALVE		9	CSC SWING CHECK VALVE	1
2	*** X102F FLOW LIMITER	1	10	X42N-3 STRAINER NEEDLE VALVE	1
3	X101 VALVE POSITION INDICATOR	1	11	BELL REDUCER	1
4	CK2 COCK (ISOLATION VALVE)	3	12	PRESSURE GAUGE	1
5	100-01 AUXILIARY HYTROL (REV. FLOW)	1	13	CK2 COCK (ISOLATION VALVE)	1
6	CRL/CRL60 PRESSURE RELIEF CONTROL	1	14	CK2 COCK (ISOLATION VALVE)	1
7	CRA PRESSURE REDUCING CONTROL	1			

OPTIONAL FEATURE SUFFIX	ADDED TO CATALOG NUMBER	
P	X141 PRESSURE GAUGE ASSEMBLY	3

CAD REVISION RECORD - DO NOT REVISE MANUALLY

LTR	DESCRIPTION	BY	DATE
A-Y	SEE REVISION FILE		
AA	ADDED "P" OPTION. (ECO 26031)	VL	2-10-17

"THIS DRAWING IS THE PROPERTY OF CLA-VAL CO. AND SAME AND COPIES MADE THEREOF, IF ANY, SHALL BE RETURNED TO IT UPON DEMAND. DELIVERY AND DISCLOSURE HEREOF ARE MADE SOLELY UPON CONDITION THAT THE SAME SHALL NOT BE USED, COPIED OR REPRODUCED, NOR SHALL THE SUBJECT HEREOF BE DISCLOSED IN ANY MANNER TO ANYONE FOR ANY PURPOSE, EXCEPT AS HEREIN AUTHORIZED, WITHOUT PRIOR WRITTEN APPROVAL OF CLA-VAL CO. THIS DRAWING IS SUBMITTED CONFIDENTIALLY AND MAY NOT BE USED IN THE MANUFACTURE OF ANY MATERIAL OR PRODUCT OTHER THAN SUCH MATERIALS AND PRODUCTS FURNISHED TO CLA-VAL CO. WHETHER OR NOT THE EQUIPMENT OR INFORMATION SHOWN HEREON IS PATENTED OR OTHERWISE PROTECTED, FULL TITLE AND COPYRIGHTS, IF ANY, IN AND TO THIS DRAWING AND/OR INFORMATION DELIVERED OR SUBMITTED ARE FULLY RESERVED BY CLA-VAL CO."

CLA-VAL CO. NEWPORT BEACH, CALIFORNIA	CATALOG NO.	DRAWING NO.	REV
TYPE OF VALVE AND MAIN FEATURES SURGE ANTICIPATOR WITH X102 FLOW LIMITER (2 1/2" TO 16" SIZES FOR 52-03 & 4" TO 24" SIZES FOR 652-03)	52-03/652-03	90483	AA

DESIGN		
DRAWN	RW	9-12-80
CHK'D	KD	9-17-80
APV'D	CH	9-18-80

OPERATING DATA

I. SURGE RELIEF FEATURE:
PRESSURE RELIEF CONTROL (6) REMAINS CLOSED WHEN UPSTREAM PRESSURE IS LESS THAN THE SET POINT OF CONTROL (6). WHEN UPSTREAM PRESSURE EXCEEDS SET POINT OF CONTROL OF CONTROL (6), CONTROL (6) OPENS. THIS RELIEVES THE MAIN VALVE COVER PRESSURE DOWNSTREAM AND THE MAIN VALVE OPENS. PRESSURE RELIEF CONTROL (6) ADJUSTMENT: TURN THE ADJUSTING SCREW CLOCKWISE TO INCREASE PRESSURE SETTING.

II. LOW PRESSURE CONTROL:
PRESSURE REDUCING CONTROL (7) REMAINS CLOSED WHEN UPSTREAM PRESSURE EXCEEDS THE LOW PRESSURE SETTING. THIS CLOSES AUXILIARY HYTROL (5). WHEN UPSTREAM PRESSURE LOWERS TO THE SET POINT OF PRESSURE REDUCING CONTROL (7), CONTROL (7) OPENS. THIS OPENS AUXILIARY HYTROL (5) WHICH IN TURN PERMITS LINE PRESSURE TO OPEN THE MAIN VALVE. PRESSURE REDUCING CONTROL (7) ADJUSTMENT: TURN THE ADJUSTING SCREW CLOCKWISE TO INCREASE PRESSURE SETTING.

CONTROL SET POINT SHOULD BE A MINIMUM OF 10 TO 15 PSI LOWER THAN SYSTEM STATIC PRESSURE.

CONTROL (7) MAY BE ADJUSTED AFTER THE VALVE IS INSTALLED AS FOLLOWS:

A. INSTALL A PRESSURE GAGE BETWEEN CK2 COCKS (4A) AND (4B).

B. TURN THE ADJUSTING SCREW ON PRESSURE REDUCING CONTROL (7) COUNTERCLOCKWISE TO RELIEVE THE SPRING LOAD.
THIS IS THE LOWEST SETTING FOR PRESSURE REDUCING CONTROL (7).

C. CLOSE CK2 COCK (4B) AND OPEN CK2 COCK (4A).

D. PRESSURIZE THE MAIN VALVE (1) IN THE CLOSED POSITION AND BLEED AIR FROM ALL HIGH POINTS. NORMAL PRESSURE SHOULD BE SHOWN ON THE PRESSURE GAGE.

E. CLOSE CK2 COCK (4A) AND OPEN CK2 COCK (4C).

F. SIGHTLY OPEN CK2 COCK (4B) AND WHEN THE DESIRED LOW PRESSURE OPENING IS REACHED, CLOSE VALVE (4B).

G. TURN CONTROL (7) ADJUSTING SCREW SLOWLY CLOCKWISE UNTIL CONTROL (7) OPENS WHICH IN TURN OPENS AUXILIARY HYTROL (5) AND THE MAIN VALVE (1).

THE FOLLOWING METHODS MAY BE USED TO DETERMINE WHEN THE MAIN VALVE OPENS:
6" AND LARGER SIZE VALVES
[ ] OBSERVE STEM IN X101 POSITION INDICATOR (3)

CAD REVISION RECORD - DO NOT REVISE MANUALLY

LTR	DESCRIPTION	BY	DATE
	SEE SHEET 1		

"THIS DRAWING IS THE PROPERTY OF CLA-VAL CO. AND SAME AND COPIES MADE THEREOF, IF ANY, SHALL BE RETURNED TO IT UPON DEMAND. DELIVERY AND DISCLOSURE HEREOF ARE MADE SOLELY UPON CONDITION THAT THE SAME SHALL NOT BE USED, COPIED OR REPRODUCED, NOR SHALL THE SUBJECT HEREOF BE DISCLOSED IN ANY MANNER TO ANYONE FOR ANY PURPOSE, EXCEPT AS HEREIN AUTHORIZED, WITHOUT PRIOR WRITTEN APPROVAL OF CLA-VAL CO. THIS DRAWING IS SUBMITTED CONFIDENTIALLY AND MAY NOT BE USED IN THE MANUFACTURE OF ANY MATERIAL OR PRODUCT OTHER THAN SUCH MATERIALS AND PRODUCTS FURNISHED TO CLA-VAL CO. WHETHER OR NOT THE EQUIPMENT OR INFORMATION SHOWN HEREON IS PATENTED OR OTHERWISE PROTECTED, FULL TITLE AND COPYRIGHTS, IF ANY, IN AND TO THIS DRAWING AND/OR INFORMATION DELIVERED OR SUBMITTED ARE FULLY RESERVED BY CLA-VAL CO."

CLA-VAL CO. NEWPORT BEACH, CALIFORNIA	CATALOG NO.	DRAWING NO.	REV
TYPE OF VALVE AND MAIN FEATURES SURGE ANTICIPATOR WITH X102 FLOW LIMITER (2 1/2" TO 16" SIZES FOR 52-03 & 4" TO 24" SIZES FOR 652-03)	52-03/652-03	90483	AA

DESIGN		
DRAWN	RW	9-12-80
CHK'D	KD	9-17-80
APV'D	CH	9-18-80

OPERATING DATA-CONTINUED

4" AND SMALLER SIZE VALVES
[ ] OBSERVE MAIN VALVE DISCHARGE IF VISIBLE.
[ ] INSTALL A PRESSURE GAGE IN THE MAIN VALVE (1) COVER AND INDICATOR WILL "DIP" WHEN THE MAIN VALVE (1) OPENS.

DURING A POWER FAILURE THE MAIN VALVE WILL OPEN WHEN REMOTELY SENSED PRESSURE LOWERS TO THE DESIRED LOW PRESSURE POINT AS SET IN PARAGRAPH "F" ABOVE.

H. OPEN CK2 COCK (4A).

III. CLOSING SPEED CONTROL:
NEEDLE VALVE (10) CONTROLS THE CLOSING SPEED OF THE MAIN VALVE. TURN THE ADJUSTING STEM CLOCKWISE TO MAKE THE MAIN VALVE CLOSE SLOWER. DO NOT CLOSE NEEDLE VALVE (10) COMPLETELY OR THE MAIN VALVE WILL NOT CLOSE. (SUGGESTED INITIAL SETTING OF NEEDLE VALVE (10) IS 1/4 TO 1/2 TURN OPEN.)

IV. FLOW LIMITING FEATURE:
FLOW LIMITER (2) LIMITS THE OPENING OF THE MAIN VALVE. TURN THE ADJUSTING SCREW COUNTERCLOCKWISE ALL THE WAY OUT TO PERMIT FULL OPENING OF THE MAIN VALVE. TURN THE ADJUSTING SCREW CLOCKWISE TO LIMIT THE OPENING OF THE MAIN VALVE. POSITION INDICATOR (3) INDICATES HOW FAR THE MAIN VALVE IS OPEN.

V. OPTIONAL FEATURE OPERATING DATA:

SUFFIX P (PRESSURE GAUGE):
PRESSURE GAUGES (P1), (P2), AND (P3) PROVIDE PRESSURE READING IN THE INLET, OUTLET, AND COVER CONNECTIONS.

VI. CHECK LIST FOR PROPER OPERATION:
( ) SYSTEM VALVES OPEN UPSTREAM AND DOWNSTREAM.
( ) AIR REMOVED FROM THE MAIN VALVE COVER AND PILOT SYSTEM AT ALL HIGH POINTS.
( ) REMOTE SENSING LINE PROPERLY CONNECTED.
IT SHOULD BE 3/4" MINIMUM I.D. COPPER OR STAINLESS STEEL TUBING OR PIPE INSTALLED WITH A 2 DEGREE SLOPE FROM VALVE TO PIPELINE HORIZONTAL CENTERLINE. AVOID AIR POCKETS AND PROTECT FROM FREEZING.
( ) CK2 COCKS (4A), (13), AND (14) OPEN DURING NORMAL OPERATION.
( ) CK2 COCK (4B) CLOSED DURING NORMAL OPERATION.
( ) PERIODIC CLEANING OF STRAINER (10) IS RECOMMENDED.
( ) NEEDLE VALVE (10) OPEN AT LEAST 1/4 TURN.

CAD REVISION RECORD - DO NOT REVISE MANUALLY

LTR	DESCRIPTION	BY	DATE
	SEE SHEET 1		

"THIS DRAWING IS THE PROPERTY OF CLA-VAL CO. AND SAME AND COPIES MADE THEREOF, IF ANY, SHALL BE RETURNED TO IT UPON DEMAND. DELIVERY AND DISCLOSURE HEREOF ARE MADE SOLELY UPON CONDITION THAT THE SAME SHALL NOT BE USED, COPIED OR REPRODUCED, NOR SHALL THE SUBJECT HEREOF BE DISCLOSED IN ANY MANNER TO ANYONE FOR ANY PURPOSE, EXCEPT AS HEREIN AUTHORIZED, WITHOUT PRIOR WRITTEN APPROVAL OF CLA-VAL CO. THIS DRAWING IS SUBMITTED CONFIDENTIALLY AND MAY NOT BE USED IN THE MANUFACTURE OF ANY MATERIAL OR PRODUCT OTHER THAN SUCH MATERIALS AND PRODUCTS FURNISHED TO CLA-VAL CO. WHETHER OR NOT THE EQUIPMENT OR INFORMATION SHOWN HEREON IS PATENTED OR OTHERWISE PROTECTED, FULL TITLE AND COPYRIGHTS, IF ANY, IN AND TO THIS DRAWING AND/OR INFORMATION DELIVERED OR SUBMITTED ARE FULLY RESERVED BY CLA-VAL CO."

CLA-VAL CO. NEWPORT BEACH, CALIFORNIA	CATALOG NO.	DRAWING NO.	REV
TYPE OF VALVE AND MAIN FEATURES SURGE ANTICIPATOR WITH X102 FLOW LIMITER (2 1/2" TO 16" SIZES FOR 52-03 & 4" TO 24" SIZES FOR 652-03)	52-03/652-03	90483	AA

DESIGN		
DRAWN	RW	9-12-80
CHK'D	KD	9-17-80
APV'D	CH	9-18-80

OPERATING DATA-CONTINUED

I. PRELIMINARY ADJUSTMENT:

A. TURN ADJUSTING SCREW ON CRL/CRL60 PRESSURE RELIEF CONTROL (6) ALL THE WAY IN, CLOCKWISE. DO NOT FORCE.

B. TURN ADJUSTING SCREW ON X102F FLOW LIMITER (2) STEM VALVE ALL THE WAY IN, CLOCKWISE.

C. TURN ADJUSTING SCREW ON CRA PRESSURE REDUCING CONTROL (7) ALL THE WAY OUT, COUNTERCLOCKWISE.

D. OPEN NEEDLE VALVE (10) ONE HALF TURN.

E. OPEN CK2 COCK (4A) ALL THE WAY.

F. CLOSE CK2 COCK (4B).

G. OPEN CK2 COCKS (13) AND (14) IN THE PILOT SYSTEM.

H. OPEN GATE VALVE AHEAD OF MAIN VALVE.

II. ADJUSTMENTS TO BE MADE WITH PUMP STOPPED:

A. ADJUST THE CRL/CRLL60 PRESSURE RELIEF CONTROL (6) UNTIL THE MAIN VALVE (1) WILL JUST STAY CLOSED. THIS IS DONE BY BACKING OUT ON THE ADJUSTING SCREW OF THE CRL/CRL60 UNTIL THE MAIN VALVE JUST STARTS TO OPEN, THEN TURN IT IN APPROXIMATELY 1/4 TO 1/2 TURN.

B. TURN ADJUSTING SCREW ON CRA PRESSURE REDUCING CONTROL (7) IN CLOCKWISE UNTIL MAIN VALVE (1) STARTS TO OPEN, THEN TURN IN ONE TO TWO ADDITIONAL TURNS.

C. AS MAIN VALVE (1) STARTS TO OPEN, BACK OUT ON X102F ADJUSTING SCREW UNTIL THE MAIN VALVE OPENS FAR ENOUGH TO DROP THE MAIN LINE PRESSURE APPROXIMATELY 25%

D. BACK OUT ON CRA PRESSURE REDUCING CONTROL (7) ADJUSTING SCREW COUNTERCLOCKWISE UNTIL THE MAIN VALVE (1) STARTS TO CLOSE, THEN BACK OUT 1/2 TURN MORE.

E. CHECK OPERATION OF THE MAIN VALVE (1) BY CLOSING CK2 COCK (4A) AND OPENING CK2 COCK (4B). AS SOON AS MAIN VALVE (1) OPENS, CLOSE CK2 COCK (4B) AND OPEN CK2 COCK (4A); THE MAIN VALVE (1) SHOULD CLOSE.

F. START PUMP AND READJUST CRL/CRL60 PRESSURE RELIEF CONTROL (6) UNTIL THE MAIN VALVE (1) JUST STAYS CLOSED AS IN PARAGRAPH "A" ABOVE.

CAD REVISION RECORD - DO NOT REVISE MANUALLY

LTR	DESCRIPTION	BY	DATE
	SEE SHEET 1		

"THIS DRAWING IS THE PROPERTY OF CLA-VAL CO. AND SAME AND COPIES MADE THEREOF, IF ANY, SHALL BE RETURNED TO IT UPON DEMAND. DELIVERY AND DISCLOSURE HEREOF ARE MADE SOLELY UPON CONDITION THAT THE SAME SHALL NOT BE USED, COPIED OR REPRODUCED, NOR SHALL THE SUBJECT HEREOF BE DISCLOSED IN ANY MANNER TO ANYONE FOR ANY PURPOSE, EXCEPT AS HEREIN AUTHORIZED, WITHOUT PRIOR WRITTEN APPROVAL OF CLA-VAL CO. THIS DRAWING IS SUBMITTED CONFIDENTIALLY AND MAY NOT BE USED IN THE MANUFACTURE OF ANY MATERIAL OR PRODUCT OTHER THAN SUCH MATERIALS AND PRODUCTS FURNISHED TO CLA-VAL CO. WHETHER OR NOT THE EQUIPMENT OR INFORMATION SHOWN HEREON IS PATENTED OR OTHERWISE PROTECTED, FULL TITLE AND COPYRIGHTS, IF ANY, IN AND TO THIS DRAWING AND/OR INFORMATION DELIVERED OR SUBMITTED ARE FULLY RESERVED BY CLA-VAL CO."

CLA-VAL CO. NEWPORT BEACH, CALIFORNIA	CATALOG NO.	DRAWING NO.	REV
TYPE OF VALVE AND MAIN FEATURES SURGE ANTICIPATOR WITH X102 FLOW LIMITER (2 1/2" TO 16" SIZES FOR 52-03 & 4" TO 24" SIZES FOR 652-03)	52-03/652-03	90483	AA

DESIGN		
DRAWN	RW	9-12-80
CHK'D	KD	9-17-80
APV'D	CH	9-18-80

OPERATING DATA-CONTINUED

THE 52-03/652-03 SURGE CONTROL VALVE IS DESIGNED TO BE USED IN CONJUNCTION WITH A BOOSTER PUMPING SYSTEM TO PREVENT EXCESSIVE SURGE PRESSURES IN THE EVENT OF POWER FAILURE. THE VALVE IS HYDRAULICALLY OPERATED WITH PILOTS THAT WILL CAUSE THE VALVE TO OPEN ON EITHER A LOW PRESSURE OR HIGH PRESSURE WAVE. UNDER NORMAL OPERATION THE VALVE CAN FUNCTION AS A RELIEF VALVE WHICH CAN BE SET TO OPEN AT ANY PRESSURE ABOVE THE NORMAL OPERATING PRESSURE. THE LOW PRESSURE PILOT CAN BE SET TO OPEN THE MAIN VALVE AT ANY PRESSURE BELOW ITS NORMAL OPERATING PRESSURE.

POWER FAILURE TO A BOOSTER PUMP WILL USUALLY RESULT IN A DOWN SURGE IN PRESSURE FOLLOWED BY AN UP SURGE IN PRESSURE. THE 52-03/652-03 SURGE CONTROL VALVE WILL OPEN ON THIS INITIAL DOWN SURGE IN PRESSURE AND WILL REMAIN OPEN SO THAT WHEN THE HIGH PRESSURE WAVE RETURNS, IT WILL PASS THROUGH THE VALVE WITHOUT GENERATING A LARGE UP SURGE IN PRESSURE. AFTER THIS WAVE HAS PASSED, THE VALVE WILL THEN CLOSE SLOWLY WITHOUT GENERATING ANY FURTHER PRESSURE SURGES.

REFERRING TO THE 52-03/652-03 SCHEMATIC, PRESSURE FROM THE REMOTE SENSING CONNECTION FLOWS THROUGH X42N-3 STRAINER (10) INTO THE COVER CHAMBER OF MAIN VALVE (1). FROM THE COVER CHAMBER, THE FLUID FLOWS OUT THROUGH X102F FLOW LIMITER (2), THEN THROUGH THE 100-01 AUXILIARY HYTROL (5) AND THEN TO THE DOWNSTREAM SIDE OF THE MAIN VALVE (1). THE AUXILIARY HYTROL (5) IS KEPT CLOSED BY PRESSURE FROM THE REMOTE SENSING CONNECTION FLOWING THROUGH X58B RESTRICTION ASSEMBLY (8) INTO THE COVER CHAMBER OF THE AUXILIARY HYTROL (5). THE CRA PRESSURE REDUCING CONTROL (7) IS THE LOW PRESSURE PILOT AND IS A NORMALLY OPEN PILOT HELD CLOSED BY PRESSURE UNDER ITS DIAPHRAGM FROM THE REMOTE SENSING CONNECTION. THE CRL/CRL60 PRESSURE RELIEF CONTROL (6) IS A NORMALLY CLOSED PILOT AND REQUIRES PRESSURE UNDER ITS DIAPHRAGM TO CAUSE IT TO OPEN AGAINST ITS SPRING SETTING.

THE CRL/CRL60 PRESSURE RELIEF CONTROL (6) SHOULD BE ADJUSTED SO THAT THE MAIN VALVE (1) WILL JUST STAY CLOSED DURING A PUMPING CONDITION. THE CRA PRESSURE REDUCING CONTROL (7) - LOW PRESSURE PILOT MUST BE SET SO THAT IT WILL OPEN ON THE INITIAL DOWN SURGE CREATED BY THE PUMP FAILURE BUT WILL AGAIN CLOSE AS SOON AS THE INITIAL DOWN SURGE HAS PASSED. THE INITIAL DOWN SURGE IN PRESSURE WILL OPEN THE CRA PRESSURE REDUCING CONTROL (7) WHICH WILL BLEED THE PRESSURE OFF OF THE COVER CHAMBER OF THE AUXILIARY HYTROL (5) FASTER THAN IT CAN BE SUPPLIED THROUGH THE X58B RESTRICTION ASSEMBLY (8) CAUSING AUXILIARY HYTROL (5) TO OPEN. IF THE SYSTEM PRESSURE IS STILL POSITIVE DURING THE DOWN SURGE IN PRESSURE, THE PRESSURE UNDER THE MAIN VALVE DISC WILL PUSH VALVE OPEN AND THE FLUID IN THE MAIN VALVE DIAPHRAGM CHAMBER WILL EVACUATE THROUGH THE X102F FLOW LIMITER (2), THROUGH THE AUXILIARY HYTROL (5) TO

CAD REVISION RECORD - DO NOT REVISE MANUALLY

LTR	DESCRIPTION	BY	DATE
	SEE SHEET 1		

"THIS DRAWING IS THE PROPERTY OF CLA-VAL CO. AND SAME AND COPIES MADE THEREOF, IF ANY, SHALL BE RETURNED TO IT UPON DEMAND. DELIVERY AND DISCLOSURE HEREOF ARE MADE SOLELY UPON CONDITION THAT THE SAME SHALL NOT BE USED, COPIED OR REPRODUCED, NOR SHALL THE SUBJECT HEREOF BE DISCLOSED IN ANY MANNER TO ANYONE FOR ANY PURPOSE, EXCEPT AS HEREIN AUTHORIZED, WITHOUT PRIOR WRITTEN APPROVAL OF CLA-VAL CO. THIS DRAWING IS SUBMITTED CONFIDENTIALLY AND MAY NOT BE USED IN THE MANUFACTURE OF ANY MATERIAL OR PRODUCT OTHER THAN SUCH MATERIALS AND PRODUCTS FURNISHED TO CLA-VAL CO. WHETHER OR NOT THE EQUIPMENT OR INFORMATION SHOWN HEREON IS PATENTED OR OTHERWISE PROTECTED, FULL TITLE AND COPYRIGHTS, IF ANY, IN AND TO THIS DRAWING AND/OR INFORMATION DELIVERED OR SUBMITTED ARE FULLY RESERVED BY CLA-VAL CO."

CLA-VAL CO. NEWPORT BEACH, CALIFORNIA	CATALOG NO.	DRAWING NO.	REV
	52-03/652-03	90483	AA

TYPE OF VALVE AND MAIN FEATURES

SURGE ANTICIPATOR WITH X102 FLOW LIMITER
(2 1/2" TO 16" SIZES FOR 52-03 &
4" TO 24" SIZES FOR 652-03)

DESIGN		
DRAWN	RW	9-12-80
CHK'D	KD	9-17-80
APV'D	CH	9-18-80

OPERATING DATA-CONTINUED

THE DOWNSTREAM SIDE OF THE MAIN VALVE (1). THE X102F FLOW LIMITER (2) IS USED DURING THIS PART OF THE RELIEF CYCLE TO PREVENT THE VALVE FROM GOING TOO FAR OPEN WHICH COULD DROP THE SYSTEM PRESSURE TOO LOW IN WHICH CASE THE CRA PRESSURE REDUCING CONTROL (7) WOULD NOT CLOSE. THE VALVE IS NOW OPEN SO THAT WHEN THE UP SURGE IN PRESSURE RETURNS, IT WILL PASS THROUGH THE VALVE WITHOUT CREATING ANY UNDUE PRESSURE SURGES ON THE SYSTEM. IF THE MAIN VALVE IS NOT OPEN FAR ENOUGH WHEN THE UP SURGE IN PRESSURE RETURNS, IT WILL OPEN THE CRL/CRL60 PRESSURE RELIEF CONTROL (6), WHICH WILL IN TURN OPEN MAIN VALVE (1) FURTHER TO RELIEVE ANY EXCESS PRESSURE. AS SOON AS THE PRESSURE RISES ABOVE THE SET POINT OF CRA PRESSURE REDUCING CONTROL (7), IT WILL CLOSE, WHICH WILL IN TURN CLOSE THE AUXILIARY HYTROL (5) AND THE MAIN VALVE (1) WILL THEN START TO CLOSE THROUGH THE REMOTE SENSING LINE. DURING THE CLOSING CYCLE THE MAIN VALVE (1) IS UNDER CONTROL OF CRL/CRL60 PRESSURE RELIEF CONTROL (6), WHICH WILL PREVENT ANY SURGES TO THE SYSTEM.

IF DURING THE INITIAL DOWN SURGE IN PRESSURE FOLLOWING THE PUMP FAILURE THE SYSTEM PRESSURE SHOULD GO NEGATIVE, THEN THE CHECK VALVE (9) WILL PREVENT ATMOSPHERIC PRESSURE FROM COMING INTO THE MAIN VALVE (1) COVER CHAMBER AND THE NEGATIVE PRESSURE FROM THE SYSTEM WILL BE APPLIED TO THE MAIN VALVE (1) COVER CHAMBER THROUGH THE REMOTE SENSING LINE CONNECTION, X42N-3 STRAINER (10), X58B RESTRICTION ASSEMBLY (8), CRA PRESSURE REDUCING CONTROL (7), AND THE AUXILIARY HYTROL (5) WHICH WILL CAUSE THE MAIN VALVE TO OPEN. AS SOON AS THE NEGATIVE PRESSURE DISSIPATES AND RETURNS TO NORMAL, THE MAIN VALVE (1) WILL CLOSE IN THE NORMAL MANNER UNDER CONTROL OF THE CRL/CRL60 PRESSURE RELIEF CONTROL (6).

CAD REVISION RECORD - DO NOT REVISE MANUALLY

LTR	DESCRIPTION	BY	DATE
	SEE SHEET 1		

"THIS DRAWING IS THE PROPERTY OF CLA-VAL CO. AND SAME AND COPIES MADE THEREOF, IF ANY, SHALL BE RETURNED TO IT UPON DEMAND. DELIVERY AND DISCLOSURE HEREOF ARE MADE SOLELY UPON CONDITION THAT THE SAME SHALL NOT BE USED, COPIED OR REPRODUCED, NOR SHALL THE SUBJECT HEREOF BE DISCLOSED IN ANY MANNER TO ANYONE FOR ANY PURPOSE, EXCEPT AS HEREIN AUTHORIZED, WITHOUT PRIOR WRITTEN APPROVAL OF CLA-VAL CO. THIS DRAWING IS SUBMITTED CONFIDENTIALLY AND MAY NOT BE USED IN THE MANUFACTURE OF ANY MATERIAL OR PRODUCT OTHER THAN SUCH MATERIALS AND PRODUCTS FURNISHED TO CLA-VAL CO. WHETHER OR NOT THE EQUIPMENT OR INFORMATION SHOWN HEREON IS PATENTED OR OTHERWISE PROTECTED, FULL TITLE AND COPYRIGHTS, IF ANY, IN AND TO THIS DRAWING AND/OR INFORMATION DELIVERED OR SUBMITTED ARE FULLY RESERVED BY CLA-VAL CO."

"This drawing is the property of CLA-VAL CO. and same and copies made thereof, if any, shall be returned to it upon demand. Delivery and disclosure hereof are made solely upon condition that the same shall not be used, copied or reproduced, nor shall the subject hereof be disclosed in any manner to anyone for any purpose, except as herein authorized, without prior written approval of CLA-VAL CO. This drawing is submitted confidentially and may not be used in the manufacture of any material or product other than such materials and products furnished to CLA-VAL CO. Whether or not the equipment or information shown hereon is patented or otherwise protected, full title and copyrights, if any, in and to this drawing and/or information delivered or submitted are fully reserved by CLA-VAL CO."

REVISIONS			
REV	DESCRIPTION	DATE	APPROVED
A-D	SEE REVISION FILE		
E	REVISED & REDRAWN ON CAD; ADDED DIM 4.00 & 4.25 ON VALVE SIZE 1 1/2" (ECO 16999)	03-19-98	AK
F	ADDED 1" SIZE SCREWED CONFIGURATION TO THE DWG (ECO 21634)	02-18-10	AK
G	DELETED 16" SIZE VALVE FROM DIMENSION TABLE, PARTS LIST, AND RELATED "COVER BEARING DETAIL" VIEW (ECO 21974)	6-16-10	PC
H	ADDED SHEET 2 (ECO 22323)	05-26-11	AK
J	ADDED WASHERS & REVISED STUD LENGTH ON 100-01 VALVES (ECO 23135)	07-18-12	MS
K	SH 2: ADDED VIEW OF BEARING HOUSING ASSY FOR 36"; ADDED VIEW OF BOLT ON BEARING ON SEAT FOR 36"; UPDATED TABLE FOR 32&" SIZE PER DRAWING 209808 (ECO 25001)	3-25-15	MS
L	ADDED 30" TO 36" HOUSING ASSEMBLY DETAIL; ADDED DIAPHRAGM WASHER SEAL DETAIL (ECO 25304)	08-19-15	RP
M	SHEET 1: SIZES FOR ITEM NO.'S 3 & 4 (STUD AND NUT) WAS 6" THRU 14" ONLY; SIZES FOR ITEM NO. 24 (BOLT) WAS 1" THRU 4" ONLY. (ECO 26536)	01-11-18	VL

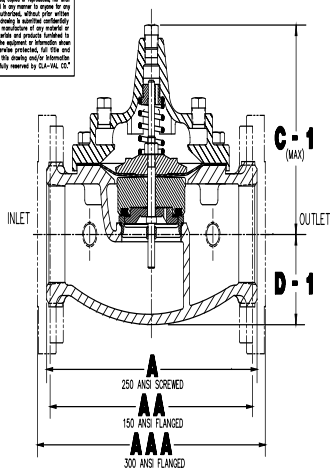

(3" SIZE SHOWN)

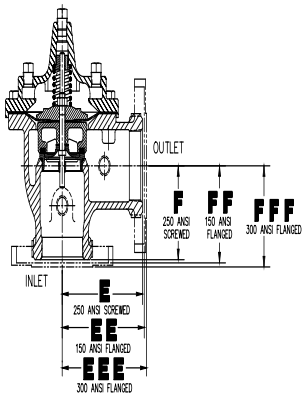

(2" SIZE SHOWN)

OLD STYLE BODY CONFIGURATIONS

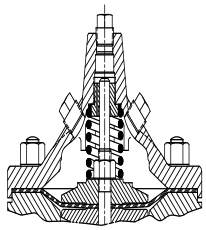

NO CORE COVER
1" THRU 3" SIZES
NTS

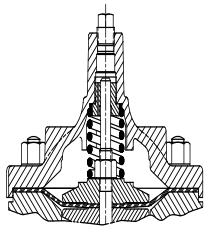

4" SIZE NO CORE COVER
NTS

DIMENSION TABLE												
VALVE SIZES	1"	1 1/4"	1 1/2"	2"	2 1/2"	3"	4"	6"	8"	10"	12"	14"
A	7.25	7.25	7.25	9.38	11.00	12.50	–	–	–	–	–	–
AA	–	–	8.50	9.38	11.00	12.00	15.00	20.00	25.38	29.75	34.00	39.00
AAA	–	–	9.00	10.00	11.62	13.25	15.62	21.00	26.38	31.12	35.50	40.50
B DIA	5.62	5.62	5.62	6.62	8.00	9.12	11.50	15.75	20.00	23.62	28.00	32.75
C MAX	5.50	5.50	5.50	6.50	7.56	8.19	10.62	13.38	16.00	–	–	–
C-1 MAX	–	4.75	4.75	5.75	6.88	7.25	9.31	12.12	14.62	17.12	20.88	24.19
D	1.12	1.12	1.12	1.50	1.69	2.06	3.19	4.31	5.31	–	–	–
D-1	–	2.00	2.00	2.50	2.88	3.12	4.25	6.00	7.56	9.25	10.75	12.62
E	3.25	3.25	3.25	4.75	5.50	6.25	–	–	–	–	–	–
EE	–	–	4.00	4.75	5.50	6.00	7.50	10.00	12.69	14.88	17.00	19.50
EEE	–	–	4.25	5.00	5.88	6.38	7.88	10.50	13.25	15.56	17.75	20.25
F	1.88	1.88	1.88	3.25	4.00	4.50	–	–	–	–	–	–
FF	–	–	4.00	3.25	4.00	4.00	5.00	6.00	8.00	8.62	13.75	14.88
FFF	–	–	4.25	3.50	4.31	4.38	5.31	6.50	8.50	9.31	14.50	15.62
G NPT	3/8"	3/8"	3/8"	3/8"	1/2"	1/2"	3/4"	3/4"	1"	1"	1"	1"
H NPT	1/4"	1/4"	1/4"	1/2"	1/2"	1/2"	3/4"	3/4"	1"	1"	1-1/4"	1-1/2"
J NPT	1/4"*	1/4"*	1/4"*	3/8"	1/2"	1/2"	3/4"	3/4"	1"	1"	1"	1"

* 3/8" NPT FOR NO CORE COVER

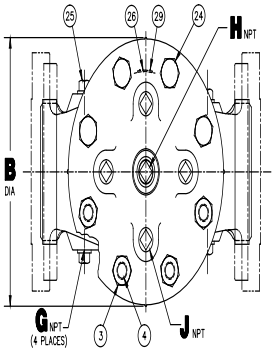

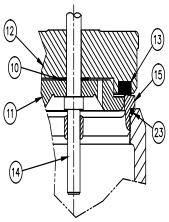

SEAT AND DISC DETAIL
1" THRU 6" ONLY
NTS

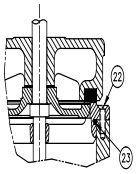

SEAT AND DISC DETAIL
8" THRU 14" ONLY
NTS

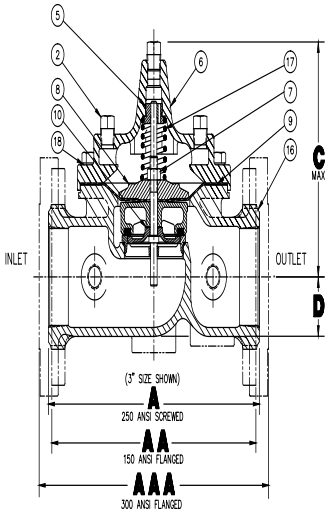

(3" SIZE SHOWN)

100-01 HYTROL
(GLOBE)

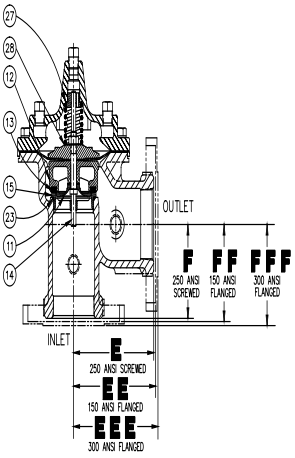

(2" SIZE SHOWN)

2100 HYTROL
(ANGLE)

** USE ON PAINTED OR EPOXY-COATED VALVES ONLY
* RECOMMENDED SPARE PARTS

ITEM NO.	DESCRIPTION	QTY
29	SCREW, DRIVE	2
28	WASHER, SPRING, LOWER **	1
27	WASHER, SPRING, UPPER **	1
26	NAMEPLATE	1
25	PLUG, PIPE, BODY	A/R
24	BOLT, HEX HD. (1" THRU 6" ONLY)	A/R
* 23	O-RING, SEAT	1
22	SCREW, FLAT HD. (8" THRU 14" ONLY)	A/R
21		
20		
19		
18	WASHER, FLAT	A/R
17	SPRING	1
16	BODY	1
15	SEAT	1
14	STEM	1
* 13	DISC	1
12	RETAINER, DISC	1
11	GUIDE, DISC	1
10	WASHER, SPACER	2
* 9	DIAPHRAGM	1
8	WASHER, DIAPHRAGM	1
7	NUT, STEM	1
6	COVER	1
5	BEARING, COVER	1
4	STUD (8" THRU 14" ONLY)	A/R
3	NUT, HEX (8" THRU 14" ONLY)	A/R
2	PLUG, PIPE, COVER	A/R
1	PLUG, PIPE, CENTER COVER	1

PART NO. 90842
LIST 1
REV M

UNLESS OTHERWISE SPECIFIED DIMENSIONS ARE IN INCHES
TOLERANCES ARE:
FRACTIONS DECIMALS ANGULAR
± 1/32 .XX± .03 ± 5°
.XXX± .010
MAX = +.00 -.09
MIN = +.09 -.00
SURFACE FINISH 125√
BREAK CORNERS .010 MAX
FILLET RADIUS .031
--DO NOT SCALE DRAWING--

CONTRACT NO. ------

APPROVALS		DATE
DRAWN	WEP	11-9-82
CHECKED	KD	11-22-82
APPROVED	CH	10-21-83
ENGR		

CLA-VAL CO. NEWPORT BEACH, CALIFORNIA

TITLE 1" THRU 14"
100-01 & 2100 HYTROL

SIZE	CAGE CODE	DWG NO.	REV
	86184	90842	M

SCALE 1/2 & NOTED UNITS/PC SHEET 1 OF 2

VL 01-11-18

"This drawing is the property of CLA-VAL CO. and same and copies made thereof, if any, shall be returned to it upon demand. Delivery and disclosure hereof are made solely upon condition that the same shall not be used, copied or reproduced, nor shall the subject hereof be disclosed in any manner to anyone for any purpose, except as herein authorized, without prior written approval of CLA-VAL CO. This drawing is submitted confidentially and may not be used in the manufacture of any material or product other than such materials and products furnished to CLA-VAL CO. Whether or not the equipment or information shown hereon is patented or otherwise protected, full title and copyrights, if any, in and to this drawing and/or information delivered or submitted are fully reserved by CLA-VAL CO."

REVISIONS			
REV	DESCRIPTION	DATE	APPROVED
	SEE SHEET 1		

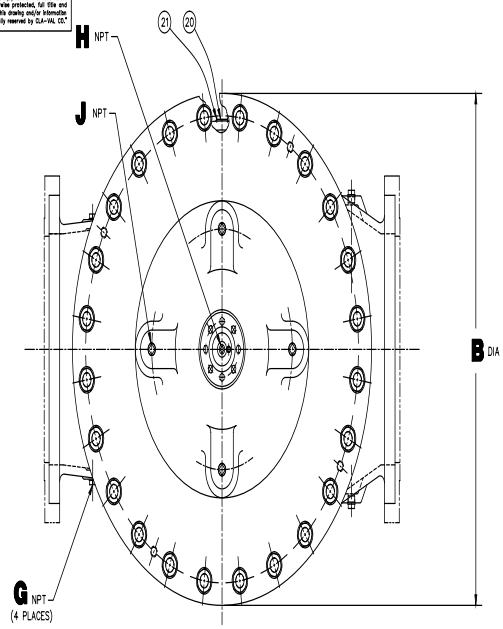

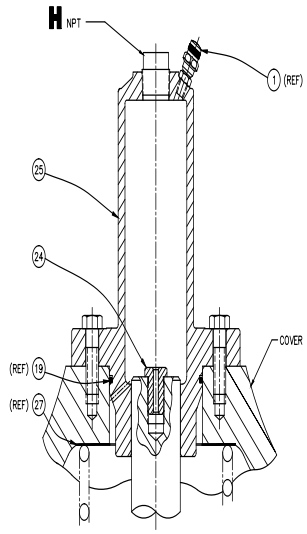

HOUSING ASSEMBLY DETAIL
18", 20", & 24" SIZES ONLY
24" SIZE SHOWN
SCALE: NONE

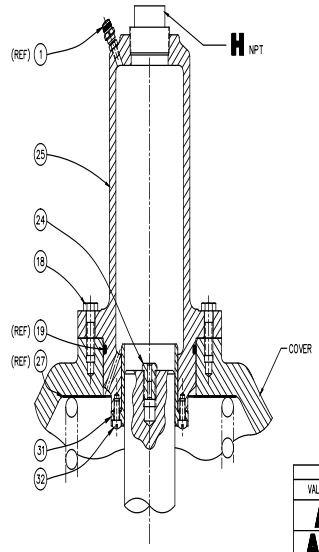

HOUSING ASSEMBLY DETAIL
30" AND 36" SIZES ONLY
36" SIZE SHOWN
SCALE: 1/2

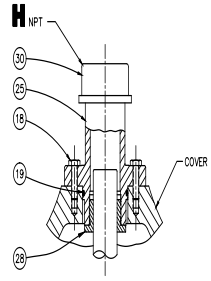

COVER BEARING/HOUSING DETAIL
16" SIZE ONLY
SCALE: NONE

DIMENSION TABLE						
VALVE SIZES	16"	18"	20"	24"	30"	36"
A	41.38	46.00	52.00	61.50	63.00	72.75
AA	43.50	47.64	53.62	63.25	64.50	–
B DIA	35.50	41.50	45.00	53.16	56.00	66.00
C MAX	25.00	39.06	42.21	45.00	54.60	59.00
D	15.50	12.95	15.00	17.75	21.31	24.50
E	20.81	–	–	30.75	–	–
EE	21.62	–	–	31.62	–	–
F	15.69	–	–	22.06	–	–
FF	16.50	–	–	22.90	–	–
G NPT	1"	1"	1"	1"	2"	2"
H NPT	2"	1"	1"	1"	2"	2"
J NPT	1"	1"	1"	1"	2"	2"
K	–	15.00	16.50	19.25	22.50	28.50

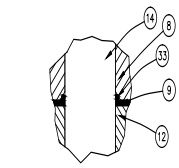

DIAPHRAGM WASHER SEAL DETAIL
30" SIZE ONLY
SCALE: 1/2

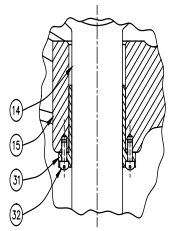

SEAT DETAIL
36" SIZE ONLY
SCALE: 1/2

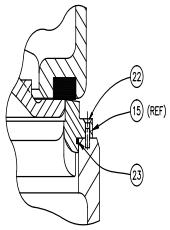

SEAT AND DISC DETAIL
SCALE: NONE

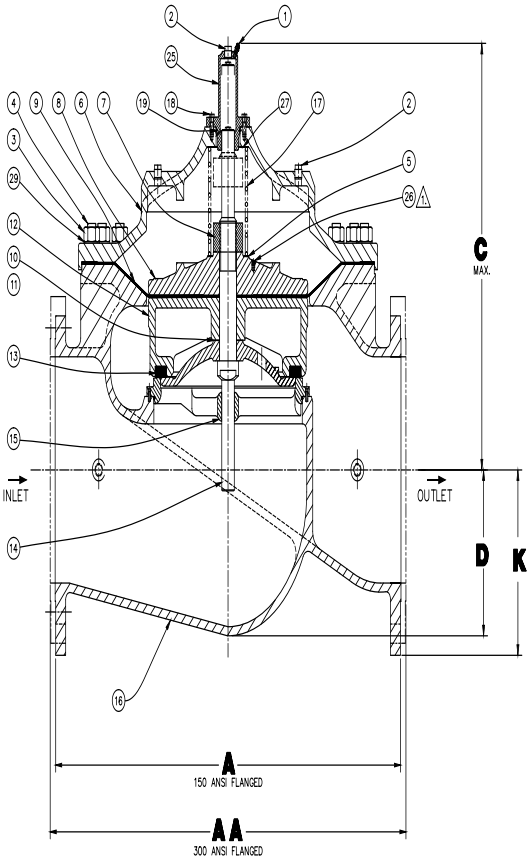

(24" SIZE SHOWN)
100-01 HYTROL
(GLOBE)

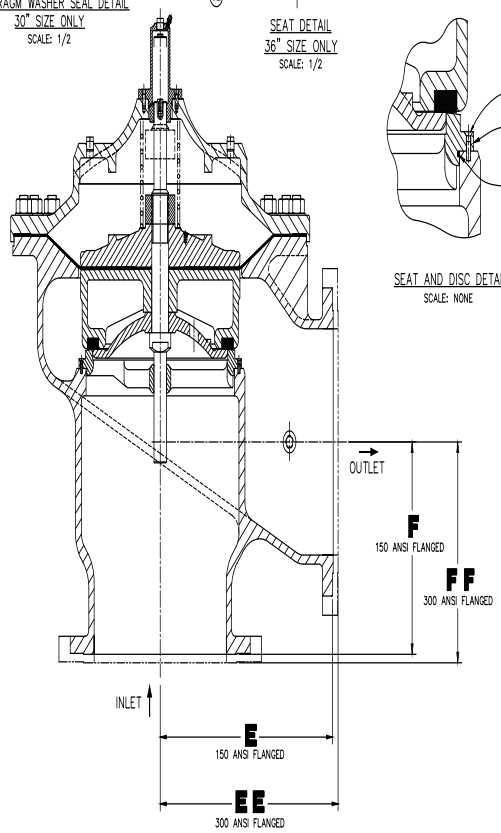

(24" SIZE SHOWN)
2100-01 HYTROL
(ANGLE)

NOTES: UNLESS OTHERWISE SPECIFIED.

1. PLUG ITEM NO. 26 SCREW INTO ITEM NO. 8 DIAPHRAGM WASHER TO PRESERVE THREAD'S FOR FIELD SERVICE HANDLING.

** USE ON PAINTED OR EPOXY-COATED VALVES ONLY
* RECOMMENDED SPARE PARTS

ITEM NO.	DESCRIPTION	QTY
* 33	O-RING (30" ONLY)	1
32	SCREW, FIL HD. (30" AND 36" ONLY)	A/R
31	INSERT, COVER BEARING (30" AND 36" ONLY)	A/R
30	CAP, PIPE (16" ONLY)	1
29	WASHER, FLAT	A/R
28	BEARING, COVER (16" ONLY)	1
27	WASHER, SPRING, UPPER **	1
1 26	SCREW, SOCKET CUP POINT	3
25	HOUSING	1
24	BUSHING, ADAPTER	1
* 23	O-RING, SEAT	1
22	SCREW, FLAT HD.	A/R
21	SCREW, DRIVE	2
20	NAMEPLATE	1
* 19	O-RING	1
18	BOLT, HEX HD.	8
17	SPRING	1
16	BODY	1
15	SEAT	1
14	STEM	1
* 13	DISC	1
12	RETAINER, DISC	1
11	GUIDE, DISC	1
10	WASHER, SPACER	2
* 9	DIAPHRAGM	1
8	WASHER, DIAPHRAGM	1
7	NUT, STEM	1
6	COVER	1
5	WASHER, SPRING, LOWER **	1
4	STUD	A/R
3	NUT, HEX	A/R
2	PLUG, PIPE	A/R
1	VALVE, PURGE (18" – 36" ONLY)	1

DWG NO. 90842 SH 2 REV M

UNLESS OTHERWISE SPECIFIED DIMENSIONS ARE IN INCHES
TOLERANCES ARE:
FRACTIONS ± 1/32 DECIMALS .XX± .03 .XXX± .010 ANGULAR ± 5°
MAX = +.00 –.09
MIN = +.09 –.00
SURFACE FINISH 125√
BREAK CORNERS .010 MAX
FILLET RADIUS .031

--DO NOT SCALE DRAWING--

CONTRACT NO. – – – – –

APPROVALS		DATE
DRAWN	WEP	11-9-92
CHECKED	KD	11-22-92
APPROVED	CH	10-21-93
ENGR		

CLA-VAL CO. NEWPORT BEACH, CALIFORNIA

TITLE 16" THRU 36" 100-01 & 2100 HYTROL

SIZE	CAGE CODE	DWG NO.	REV
	86184	90842	M

SCALE 1/6 & NOTED UNITS/PC SHEET 2 OF 2

VL 01-11-18

CLA-VAL

—MODEL— 100-01

Hytrol Valve

Description

The Cla-Val Model 100-01 Hytrol Valve is a main valve for Cla-Val Automatic Control Valves. It is a hydraulically operated, diaphragm-actuated, globe or angle pattern valve.

This valve consists of three major components; body, diaphragm assembly, and cover. The diaphragm assembly is the only moving part. The diaphragm assembly uses a diaphragm of nylon fabric bonded with synthetic rubber. A synthetic rubber disc, contained on three and one half sides by a disc retainer and disc guide, forms a seal with the valve seat when pressure is applied above the diaphragm. The diaphragm assembly forms a sealed chamber in the upper portion of the valve, separating operating pressure from line pressure.

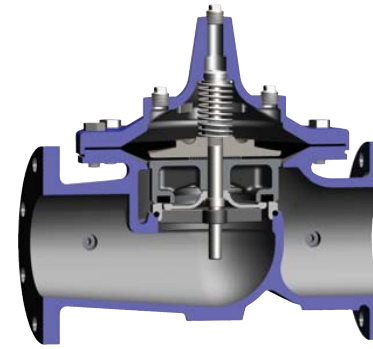

Installation

1. Before valve is installed, pipe lines should be flushed of all chips, scale and foreign matter.
2. It is recommended that either gate or block valves be installed on both ends of the 100-01 Hytrol Valve to facilitate isolating the valve for preventive maintenance and repairs.
3. Place the valve in the line with flow through the valve in the direction indicated on the inlet nameplate. (See “Flow Direction” Section) **Note: Valve can be installed in the vertical or horizontal position.**
4. Allow sufficient room around valve to make adjustments and for disassembly.
5. Cla-Val 100-01 Hytrol Valves operate with maximum efficiency when mounted in horizontal piping with the cover UP, however, other positions are acceptable. Due to size and weight of the cover and internal components of 8 inch and larger valves, installation with the cover UP is advisable. This makes internal parts readily accessible for periodic inspection.
6. Caution must be taken in the installation of this valve to insure that galvanic and/or electrolytic action does not take place. The proper use of dielectric fittings and gaskets are required in all systems using dissimilar metals.
7. If a pilot control system is installed on the 100-01 Hytrol Valve, use care to prevent damage. If it is necessary to remove fittings or components, be sure they are kept clean and replaced exactly as they were.
8. After the valve is installed and the system is first pressurized, vent air from the cover chamber and pilot system tubing by loosening fittings at all high points.

Principles of Operation

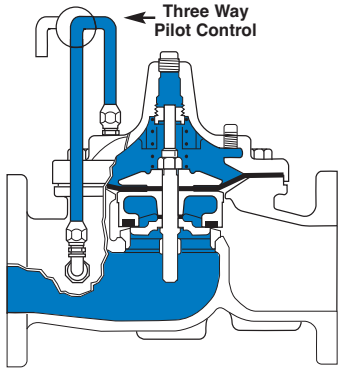

Tight Closing Operation
When pressure from the valve inlet (or an equivalent independent operating pressure) is applied to the diaphragm chamber the valve closes drip-tight.

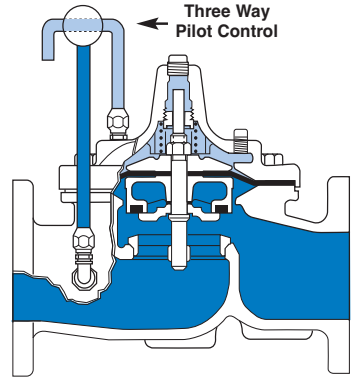

Full Open Operation
When pressure in diaphragm chamber is relieved to a zone of lower pressure (usually atmosphere) the line pressure (5 psi Min.) at the valve inlet opens the valve.

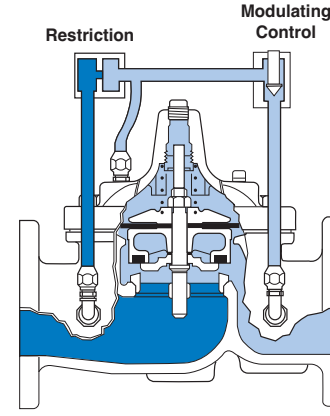

Modulating Action
Valve modulates when diaphragm pressure is held at an intermediate point between inlet and discharge pressure. With the use of a Cla-Val. "modulating control," which reacts to line pressure changes, the pressure above the diaphragm is varied, allowing the valve to throttle and compensate for the change.

Flow Direction

The flow through the 100-01 Hytrol Valve can be in one of two directions. When flow is “up-and-over the seat,” it is in “normal” flow and the valve will fail in the open position. When flow is “over-the seat-and down,” it is in “reverse” flow and the valve will fail in the closed position. There are no permanent flow arrow markings. **The valve must be installed according to nameplate data.**

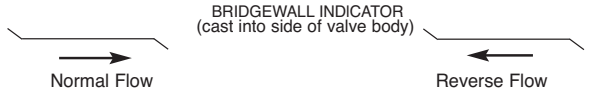

Recommended Tools

1. Three pressure gauges with ranges suitable to the installation to be put at Hytrol inlet, outlet and cover connections.

2. Cla-Val Model X101 Valve Position Indicator. This provides visual indication of valve position without disassembly of valve.

3. Other items are: suitable hand tools such as screwdrivers, wrenches, etc. soft jawed (brass or aluminum) vise, 400 grit wet or dry sandpaper and water for cleaning.

Troubleshooting

The following troubleshooting information deals strictly with the Model 100-01 Hytrol Valve. This assumes that all other components of the pilot control system have been checked out and are in proper working condition. (See appropriate sections in Technical Manual for complete valve).

All trouble shooting is possible without removing the valve from the line or removing the cover. It is highly recommended to permanently install a Model X101 Valve Position Indicator and three gauges in unused Hytrol inlet, outlet and cover connections.

SYMPTOM	PROBABLE CAUSE	REMEDY
Fails to Close	Closed isolation valves in control system, or in main line.	Open Isolation valves.
	Lack of cover chamber pressure.	Check upstream pressure, pilot system, strainer, tubing, valves, or needle valves for obstruction.
	Diaphragm damaged. (See Diaphragm Check.)	Replace diaphragm.
	Diaphragm assembly inoperative. Corrosion or excessive scale build up on valve stem. (See Freedom of Movement Check)	Clean and polish stem. Inspect and replace any damaged or badly eroded part.
	Mechanical obstruction. Object lodged in valve. (See Freedom of Movement Check)	Remove obstruction.
	Worn disc. (See Tight Sealing Check)	Replace disc.
	Badly scored seat. (See Tight Sealing Check)	Replace seat.
Fails to Open	Closed upstream and/or downstream isolation valves in main line.	Open isolation valves.
	Insufficient line pressure.	Check upstream pressure. (Minimum 5 psi flowing line pressure differential.)
	Diaphragm assembly inoperative. Corrosion or excessive buildup on valve stem. (See Freedom of Movement Check)	Clean and polish stem. Inspect and replace any damaged or badly eroded part.
	Diaphragm damaged. (For valves in "reverse flow" only)	Replace diaphragm.

After checking out probable causes and remedies, the following three checks can be used to diagnose the nature of the problem before maintenance is started. They must be done in the order shown.

Three Checks

The 100-01 Hytrol Valve has only one moving part (the diaphragm and disc assembly). So, there are only three major types of problems to be considered.

First: Valve is stuck - that is, the diaphragm assembly is not free to move through a full stroke either from open to close or vice versa.

Second: Valve is free to move and can’t close because of a worn out diaphragm.

Third: Valve leaks even though it is free to move and the diaphragm isn’t leaking.

***CAUTION**:*
*Care should be taken when doing the troubleshooting checks on the 100-01 Hytrol Valve. These checks do require the valve to open fully. This will either allow a high flow rate through the valve, or the downstream pressure will quickly increase to the inlet pressure. In some cases, this can be very harmful. Where this is the case, and there are no block valves in the system to protect the downstream piping, it should be realized that **the valve cannot be serviced under pressure.** Steps should be taken to remedy this situation before proceeding any further.*

Diaphragm Check (#1)

1. Shut off pressure to the Hytrol Valve by slowly closing upstream and downstream isolation valves. **SEE CAUTION**.

2. Disconnect or close all pilot control lines to the valve cover and leave only one fitting in highest point of cover open to atmosphere.

3.With the cover vented to atmosphere, slowly open upstream isolation valve to allow some pressure into the Hytrol Valve body. Observe the open cover tapping for signs of continuous flow. It is not necessary to fully open isolating valve. Volume in cover chamber capacity chart will be displaced as valve moves to open position. Allow sufficient time for diaphragm assembly to shift positions. If there is no continuous flow, you can be quite certain the diaphragm is sound and the diaphragm assembly is tight. If the fluid appears to flow continuously this is a good reason to believe the diaphragm is either damaged or it is loose on the stem. In either case, this is sufficient cause to remove the valve cover and investigate the leakage. (See "Maintenance" Section for procedure.)

COVER CHAMBER CAPACITY
(Liquid Volume displaced when valve opens)

Valve size (inches)	Displacement	
	Gallons	Liters
1 1/4	.020	.07
1 1/2	.020	.07
2	.032	.12
2 1/2	.043	.16
3	.080	.30
4	.169	.64
6	.531	2.0
8	1.26	4.8
10	2.51	9.5
12	4.00	15.1
14	6.50	24.6
16	9.57	36.2
20	12.00	45.4
24	29.00	109.8
30	42.00	197.0
36	90.00	340.0

Freedom of Movement Check (#2)

4. Determining the Hytrol Valve's freedom of movement can be done by one of two methods.

5. For most valves it can be done after completing Diaphragm Check (Steps 1, 2, and 3). **SEE CAUTION**. At the end of step 3 the valve should be fully open.

6. If the valve has a Cla-Val X101 Position Indicator, observe the indicator to see that the valve opens wide. Mark the point of maximum opening.

7. Re-connect enough of the control system to permit the application of inlet pressure to the cover. Open pilot system cock so pressure flows from the inlet into the cover.

8. While pressure is building up in the cover, the valve should close smoothly. There is a hesitation in every Hytrol Valve closure, which can be mistaken for a mechanical bind. The stem will appear to stop moving very briefly before going to the closed position. This slight pause is caused by the diaphragm flexing at a particular point in the valve's travel and is not caused by a mechanical bind.

9. When closed, a mark should be made on the X101 Valve position indicator corresponding to the "closed" position. The distance between the two marks should be approximately the stem travel shown in chart.

STEM TRAVEL
(Fully Open to Fully Closed)

Valve Size (inches)		Travel (inches)	
Inches	MM	Inches	MM
1 1/4	32	0.4	10
1 1/2	40	0.4	10
2	50	0.6	15
2 1/2	65	0.7	18
3	80	0.8	20
4	100	1.1	28
6	150	1.7	43
8	200	2.3	58
10	250	2.8	71
12	300	3.4	86
14	350	4.0	100
16	400	4.5	114
20	500	5.6	143
24	600	6.7	165
30	800	7.5	190
36	900	8.5	216

10. If the stroke is different than that shown in stem travel chart this is a good reason to believe something is mechanically restricting the stroke of the valve at one end of its travel. If the flow does not stop through the valve when in the indicated "closed" position, the obstruction probably is between the disc and the seat. If the flow does stop, then the obstruction is more likely in the cover. In either case, the cover must be removed, and the obstruction located and removed. The stem should also be checked for scale build-up. (See "Maintenance, section for procedure.)

11. For valves 6" and smaller, the Hytrol Valve's freedom of movement check can also be done after all pressure is removed from the valve. **SEE CAUTION**. After closing inlet and outlet isolation valves and bleeding pressure from the valve, check that the cover chamber and the body are temporarily vented to atmosphere. Insert fabricated tool into threaded hole in top of valve stem, and lift the diaphragm assembly manually. Note any roughness. The diaphragm assembly should move smoothly throughout entire valve stroke. The tool is fabricated from rod that is threaded on one end to fit valve stem and has a "T" bar handle of some kind on the other end for easy gripping. (See chart in Step 4 of "Disassembly" Section.)

12. Place marks on this diaphragm assembly lifting tool when the valve is closed and when manually positioned open. The distance between the two marks should be approximately the stem travel shown in stem travel chart. If the stroke is different than that shown, there is a good reason to believe something is mechanically restricting the stroke of the valve. The cover must be removed, and the obstruction located and removed. The stem should also be checked for scale build-up. (See "Maintenance" Section for procedure.)

Tight Sealing Check (#3)

13. Test for seat leakage after completing checks #1 & #2 (Steps 1 to 12). **SEE CAUTION.** Close the isolation valve downstream of the Hytrol Valve. Apply inlet pressure to the cover of the valve, wait until it closes. Install a pressure gauge between the two closed valves using one of the two ports in the outlet side of the Hytrol. Watch the pressure gauge. If the pressure begins to climb, then either the downstream isolation valve is permitting pressure to creep back, or the Hytrol is allowing pressure to go through it. Usually the pressure at the Hytrol inlet will be higher than on the isolation valve discharge, so if the pressure goes up to the inlet pressure, you can be sure the Hytrol is leaking. Install another gauge downstream of isolating valve. If the pressure between the valves only goes up to the pressure on the isolation valve discharge, the Hytrol Valve is holding tight, and it was just the isolation valve leaking.

Maintenance

Preventative Maintenance

The Cla-Val Co. Model 100-01 Hytrol Valve requires no lubrication or packing and a minimum of maintenance. However, a periodic inspection schedule should be established to determine how the operating conditions of the system are affecting the valve. The effect of these actions must be determined by inspection.

Disassembly

Inspection or maintenance can be accomplished without removing the valve from the line. Repair kits with new diaphragm and disc are recommended to be on hand before work begins.

WARNING: Maintenance personnel can be injured and equipment damaged if disassembly is attempted with pressure in the valve. **SEE CAUTION.**

1. Close upstream and downstream isolation valves **and independent operating pressure when used** to shut off all pressure to the valve.

2. Loosen tube fittings in the pilot system to remove pressure from valve body and cover chamber. After pressure has been released from the valve, use care to remove the controls and tubing. Note and sketch position of tubing and controls for re-assembly. The schematic in front of the Technical Manual can be used as a guide when reassembling pilot system.

3. Remove cover nuts and remove cover. If the valve has been in service for any length of time, chances are the cover will have to be loosened by driving upward along the edge of the cover with a **dull** cold chisel.

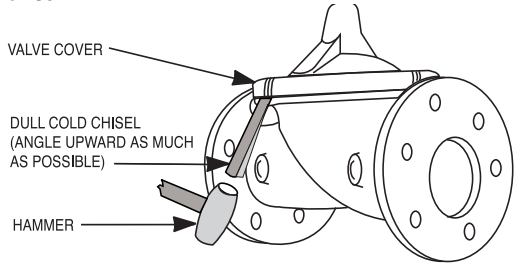

On 6” and smaller valves block and tackle or a power hoist can be used to lift valve cover by inserting proper size eye bolt in place of the center cover plug. on 8” and larger valves there are 4 holes (5/8” — 11 size) where jacking screws and/or eye bolts may be inserted for lifting purposes. **Pull cover straight up** to keep from damaging the integral seat bearing and stem.

COVER CENTER PLUG SIZE

Valve Size	Thread Size (NPT)
1 1/4"—1 1/2"	1/4"
2"—3"	1/2"
4"—6"	3/4"
8"—10"	1"
12"	1 1/4"
14"	1 1/2"
16"	2"
20” & 24"	2"
30” & 36”	2”

4. Remove the diaphragm and disc assembly from the valve body. With smaller valves this can be accomplished by hand by **pulling straight up on the stem so as not to damage the seat bearing.** On large valves, an eye bolt of proper size can be installed in the stem and the diaphragm assembly can be then lifted with a block and tackle or power hoist. Take care not to damage the stem or bearings. The valve won't work if these are damaged.

VALVE STEM THREAD SIZE

Valve Size	Thread Size (UNF Internal)
1 1/4"—2 1/2"	10—32
3"—4"	1/4—28
6"—14"	3/8—24
16"	1/2—20
20	3/4-16
24"	3/4-16
30”	3/4-16
36”	3/4-16

5. The next item to remove is the stem nut. Examine the stem threads above the nut for signs of mineral deposits or corrosion. If the threads are not clean, use a wire brush to remove as much of the residue as possible. Attach a good fitting wrench to the nut and give it a sharp “rap” rather than a steady pull. Usually several blows are sufficient to loosen the nut for further removal. On the smaller valves, the entire diaphragm assembly can be held by the stem in a vise **equipped with soft brass jaws** before removing the stem nut.

The use of a pipe wrench or a vise without soft brass jaws scars the fine finish on the stem. No amount of careful dressing can restore the stem to its original condition. Damage to the finish of the stem can cause the stem to bind in the bearings and the valve will not open or close.

6. After the stem nut has been removed, the diaphragm assembly breaks down into its component parts. Removal of the disc from the disc retainer can be a problem if the valve has been in service for a long time. Using two screwdrivers inserted along the outside edge of the disc usually will accomplish its removal. Care should be taken to preserve the spacer washers in water, particularly if no new ones are available for re-assembly.

7. The only part left in the valve body is the seat which ordinarily does not require removal. Careful cleaning and polishing of inside and outside surfaces with 400 wet/dry sandpaper will usually restore the seat’s sharp edge. If, however, it is badly worn and replacement is necessary, it can be easily removed.

Seats in valve sizes 1 1/4” through 6” are threaded into the valve body. They can be removed with accessory X109 Seat Removing Tool available from the factory. On 8” and larger valves, the seat is held in place by flat head machine screws. Use a tight-fitting, long shank screwdriver to prevent damage to seat screws. If upon removal of the screws the seat cannot be lifted out, it will be necessary to use a piece of angle or channel iron with a hole drilled in the center. Place it across the body so a long stud can be inserted through the center hole in the seat and the hole in the angle iron. By tightening the nut a uniform upward force is exerted on the seat for removal.

NOTE: Do not lift up on the end of the angle iron as this may force the integral bearing out of alignment, causing the stem to bind.

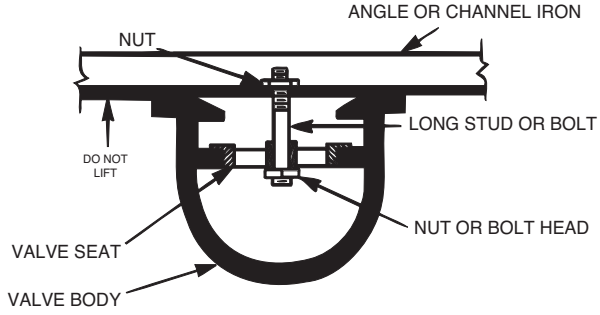

Lime Deposits

One of the easiest ways to remove lime deposits from the valve stem or other metal parts is to dip them in a 5-percent muriatic acid solution just long enough for the deposit to dissolve. This will remove most of the common types of deposits. **CAUTION: USE EXTREME CARE WHEN HANDLING ACID.** Rinse parts in water before handling. If the deposit is not removed by acid, then a fine grit (400) wet or dry sandpaper can be used with water.

Inspection of Parts

After the valve has been disassembled, each part should be examined carefully for signs of wear, corrosion, or any other abnormal condition. Usually, it is a good idea to replace the rubber parts (diaphragm and disc) unless they are free of signs of wear. These are available in a repair kit. Any other parts which appear doubtful should be replaced. WHEN ORDERING PARTS, BE SURE TO GIVE COMPLETE NAMEPLATE DATA, ITEM NUMBER AND DESCRIPTION.

NOTE: If a new disc isn't available, the existing disc can be turned over, exposing the unused surface for contact with the seat. The disc should be replaced as soon as practical.

Reassembly

1. Reassembly is the reverse of the disassembly procedure. If a new disc has been installed, it may require a different number of spacer washers to obtain the right amount of "grip" on the disc. When the diaphragm assembly has been tightened to a point where the diaphragm cannot be twisted, the disc should be compressed very slightly by the disc guide. Excessive compression should be avoided. Use just enough spacer washers to hold the disc firmly without noticeable compression.

2. MAKE SURE THE STEM NUT IS VERY TIGHT. Attach a good fitting wrench to the nut and give it a sharp "rap" rather than a steady pull. Usually several blows are sufficient to tighten the stem nut for final tightening. Failure to do so could allow the diaphragm to pull loose and tear when subjected to pressure.

3. Carefully install the diaphragm assembly by lowering the stem through the seat bearing. Take care not to damage the stem or bearing. Line up the diaphragm holes with the stud or bolt holes on the body. on larger valves with studs, it may be necessary to hold the diaphragm assembly up part way while putting the diaphragm over the studs.

4. Put spring in place and replace cover. Make sure diaphragm is lying smooth under the cover.

5. Tighten cover nuts firmly using a cross-over pattern until all nuts are tight.

6. Test Hytrol Valve before re-installing pilot valve system.

Test Procedure After Valve Assembly

There are a few simple tests which can be made in the field to make sure the Hytrol Valve has been assembled properly. Do these before installing pilot system and returning valve to service. These are similar to the three troubleshooting tests.

1. Check the diaphragm assembly for freedom of movement after all pressure is removed from the valve. **SEE CAUTION.** Insert fabricated tool into threaded hole in top of valve stem, and lift the diaphragm assembly manually. Note any roughness, sticking or grabbing. The diaphragm assembly should move smoothly throughout entire valve stroke. The tool is fabricated from rod that is threaded on one end to fit valve stem (See chart in Step 4 of "Disassembly" section.) and has a "T" Bar handle of some kind on the other end for easy gripping.

Place marks on this diaphragm assembly lifting tool when the valve is closed and when manually positioned open. The distance between the two marks should be approximately the stem travel shown in stem travel chart. (See "Freedom of Movement Check" section.) If the stroke is different than that shown, there is a good reason to believe something is mechanically restricting the stroke of the valve. The cover must be removed, the obstruction located and removed. (See "Maintenance" Section for procedure.)

Due to the weight of the diaphragm assembly this procedure is not possible on valves 8" and larger. on these valves, the same determination can be made by carefully introducing a low pressure-less than five psi) into the valve body with the cover vented. **SEE CAUTION**. Looking in cover center hole see the diaphragm assembly lift easily without hesitation, and then settle back easily when the pressure is removed.

2. To check the valve for drip-tight closure, a line should be connected from the inlet to the cover, and pressure applied at the inlet of the valve. If properly assembled, the valve should hold tight with as low as ten PSI at the inlet. See "Tight Sealing Check" section.)

3. With the line connected from the inlet to the cover, apply full working pressure to the inlet. Check all around the cover for any leaks. Re-tighten cover nuts if necessary to stop leaks past the diaphragm.

4. Remove pressure, then re-install the pilot system and tubing exactly as it was prior to removal. **Bleed air from all high points.**

5. Follow steps under "Start-Up and Adjustment" Section in Technical Manual for returning complete valve back to service.

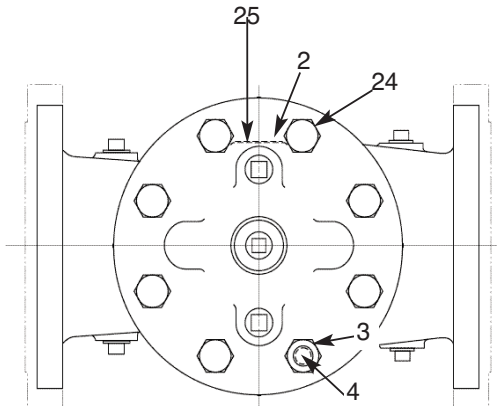

TOP VIEW

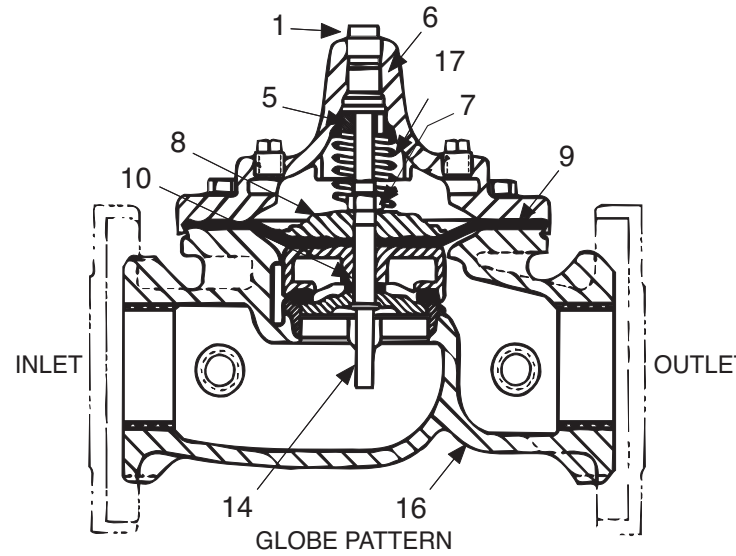

GLOBE PATTERN

PARTS LIST

Item	Description
1.	Pipe Plug
2.	Drive Screws (for nameplate)
3.	Hex Nut (8” and larger)
4.	Stud (8” and larger)
5.	Cover Bearing
6.	Cover
7.	Stem Nut
8.	Diaphragm Washer
9.	Diaphragm
10.	Spacer Washers
11.	Disc Guide
12.	Disc Retainer
13.	Disc
14.	Stem
15.	Seat
16.	Body
17.	Spring
22.	Flat Head Screws (8” and larger)
23.	Seat O-Ring
24.	Hex head Bolt (1 1/4” thru 4”)
25.	Nameplate
26.	Upper Spring Washer (Epoxy coated valves only)
27.	Lower Spring Washer (Epoxy coated valves only)
28.	Cover Bearing Housing (16” only)
29.	Cover O-Ring (16’’’ only)
30.	Hex Bolt (16” only)
31.	Pipe Cap (16” only)

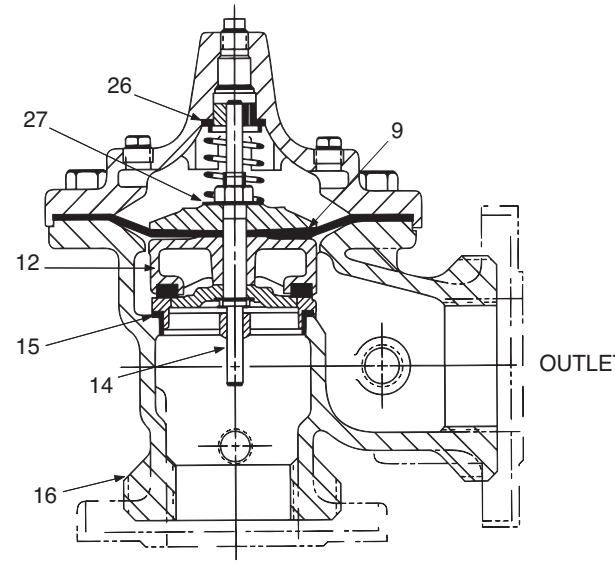

INLET
ANGLE PATTERN

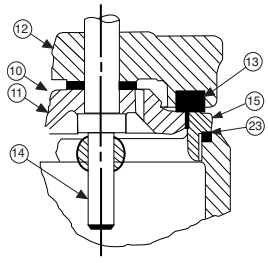

1 1/4" - 6" SEAT DETAIL

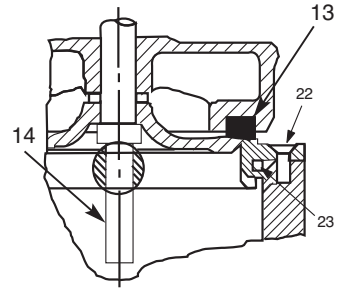

8" - 24" SEAT DETAIL

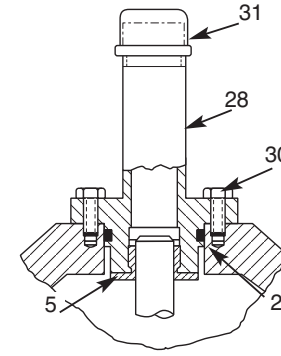

16" COVER DETAIL

CLA-VAL™

—MODEL—

100-01

Hytrol Valve Service Data

Description 100-01 Hytrol Valve

The Cla-Val Model 100-01 Hytrol Valve is a main valve for Cla-Val Automatic Control Valves. It is a hydraulically operated, diaphragm-actuated, globe or angle pattern valve.

This valve consists of three major components; body, diaphragm assembly, and cover. The diaphragm assembly is the only moving part. The diaphragm assembly uses a diaphragm of nylon fabric bonded with synthetic rubber. A synthetic rubber disc, contained on three and one half sides by a disc retainer and disc guide, forms a seal with the valve seat when pressure is applied above the diaphragm. The diaphragm assembly forms a sealed chamber in the upper portion of the valve, separating operating pressure from line pressure.

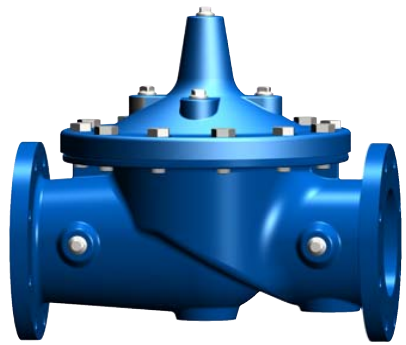

Description 100-20 600 Series Hytrol Valve

The Cla-Val Model 100-20 Hytrol Valve (600 Series main valve) have only one part -the body- that is different from standard 100 Series Cla-Val main valve parts. The remaining parts of the 600 series main valve are standard Cla-Val main valve parts. All service and maintenance information for the standard 100 Series main valves also apply to the 600 series main valves.
The most important thing to remember when ordering main valve repair kits and replacement parts, except for the body, all other parts are going to be for a smaller size main valve. Cla-Val identifies main valve parts with the flange size of the standard 100 Series main valve. Refer to the "Main Valve Sizes" chart below.

HYTROL Service Data

HYTROL SIZE				Stem Travel		Cover Capacity Displacement		Valve Stem Thread UNF-Internal	Cover Center Plug NPT	Cover Nut or Bolt			Cover Lifting Holes UNC	Cover Plug		Cover Torque		Stem Nut**		Stem Nut Torque (ft. Lbs.)	
100-01		100-20								Thread (Bolt)	Socket	Qty		Thread	Socket	ft. Lbs.	in. Lbs.	Thread	Socket (Long)	Lubed	DRY
inches	mm	inches	mm	inches	mm	Gallons	Liters														
1"	25			0.3	8				1/4"	1/4" - 20 (B)	7/16"	8				4	48	3/8" - 24		4	6
1 1/4"	32			0.4	10	0.020	0.07	10 - 32	1/4"	5/16" - 18 (B)	1/2"	8				8	96	7/16" -20		6	10
1 1/2"	40			0.4	10	0.020	0.07	10 - 32	1/4"	5/16" - 18 (B)	1/2"	8				8	96	7/16" -20		6	10
2"	50			0.6	15	0.032	0.12	10 - 32	1/2"	3/8" - 16 (B)	9/16"	8		3/8"	7/16"	12		1/2" - 20	3/4"	10	15
2 1/2"	65			0.7	18	0.043	0.16	10 - 32	1/2"	7/16" - 14 (B)	5/8"	8		1/2"	9/16"	20		5/8" - 18	15/16"	21	30
3"	80	4"	100	0.8	20	0.080	0.30	1/4 - 28	1/2"	1/2" - 13 (B)	3/4"	8		1/2"	9/16"	30		5/8" - 18	15/16"	21	30
4"	100	6"	150	1.1	23	0.169	0.64	1/4 - 28	3/4"	3/4" - 10 (B)	1 1/8"	8		3/4"	5/8"	110		3/4" - 16	1 1/16"	40	60
6"	150	8"	200	1.7	43	0.531	2.00	3/8 - 24	3/4"	3/4" - 10 (B)	1 1/8"	12		3/4"	5/8"	110		7/8" - 14	1 5/16"	85	125
8"	200	10"	250	2.3	58	1.26	4.80	3/8 - 24	1"	3/4" - 10	1 1/4"	16	5/8" - 11	1"	13/16"	110		1 1/8" -12	1 13/16"	125	185
10"	250	12"	300	2.8	71	2.51	9.50	3/8 - 24	1"	7/8" - 9	1 7/16"	20	3/4" - 10	1"	13/16"	160		1 1/2" -12	1 7/8"	252	375
12"	300	16"	400	3.4	86	4.0	15.10	3/8 - 24	1 1/4"	1 1/8" - 7	1 13/16"	20	3/4" - 10	1"	13/16"	390		1 1/2" -12	2 1/2"	270	400
14"	350			3.9	99	6.5	24.60	3/8 - 24	1 1/2"	1 1/4" - 7	2"	20	1" - 8	1"	13/16"	545		1 1/2" -12	2 1/2"	280	420
16"	400	20", 24"	600	4.5	114	9.6	36.20	1/2 - 20	2"	1 1/4" - 7	2"	20	1" - 8	1"	13/16"	545		2" - 16	3"	500	750
20"	500			5.63	143	12	45.40	3/4 - 16	1 1/2"	1 3/8" - 6	2 1/8"	24	1" - 8	1"	13/16"	670		2 1/4" - 16	3 1/2"	930	N/R
24"	600	30"	800	6.75	165	29.0	108.80	3/4 - 16*	3/4"	1 1/2" - 12	2 3/8"	24	1 1/8"- 7	1"	13/16"	800		3" - 12	Special	1350	N/R
								* Adapter p/n 2594101E inside 1/4" - 28"		Grade 5 Bolts "Heavy" Grade Nuts Tighten cover nuts in a "star" cross-over pattern								** Must Use ONLY Cla-Val Supplied part			

BOLT/NUT TORQUING PROCEDURES ON VALVE COVERS

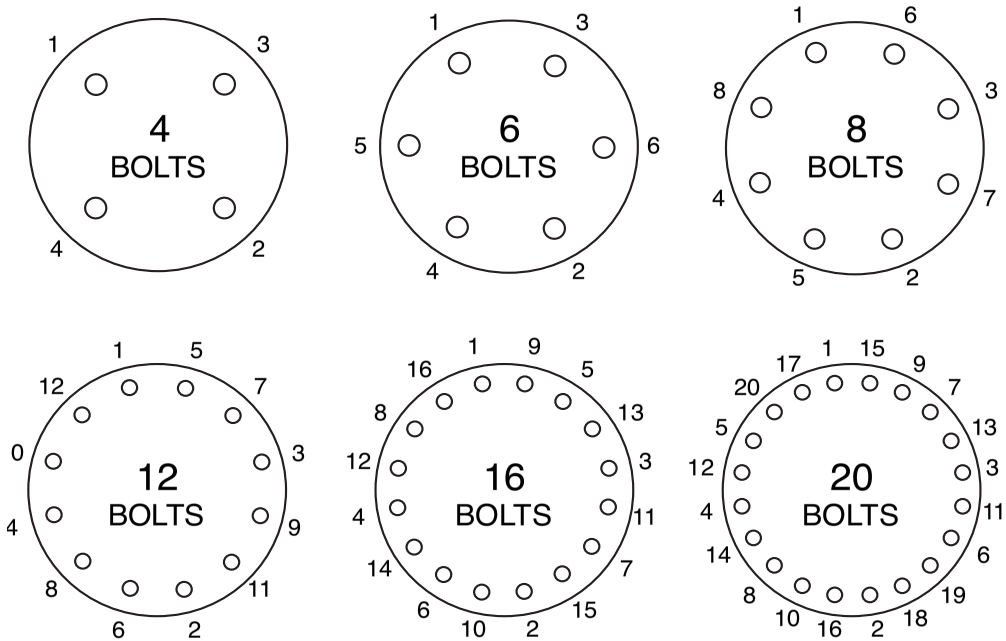

Follow this procedure when reassembling MAIN Valve:

1. Tightens bolts/nuts in a “Star” or “Cross-Over” pattern following the numbers shown above to insure that cover seats evenly on the diaphragm material and body.

2. Torque the bolt/nuts in three stages with a "Star" or "Cross-Over" pattern for each stage:

   A. To approximately 10% of final torque.
   B. To approximately 75% of final torque.
   C. To final required torque.

3. Valves that are to be tested to 375 PSI or higher should be retorqued after 24 hours.

100-01 Hytrol Main Valve Assembly

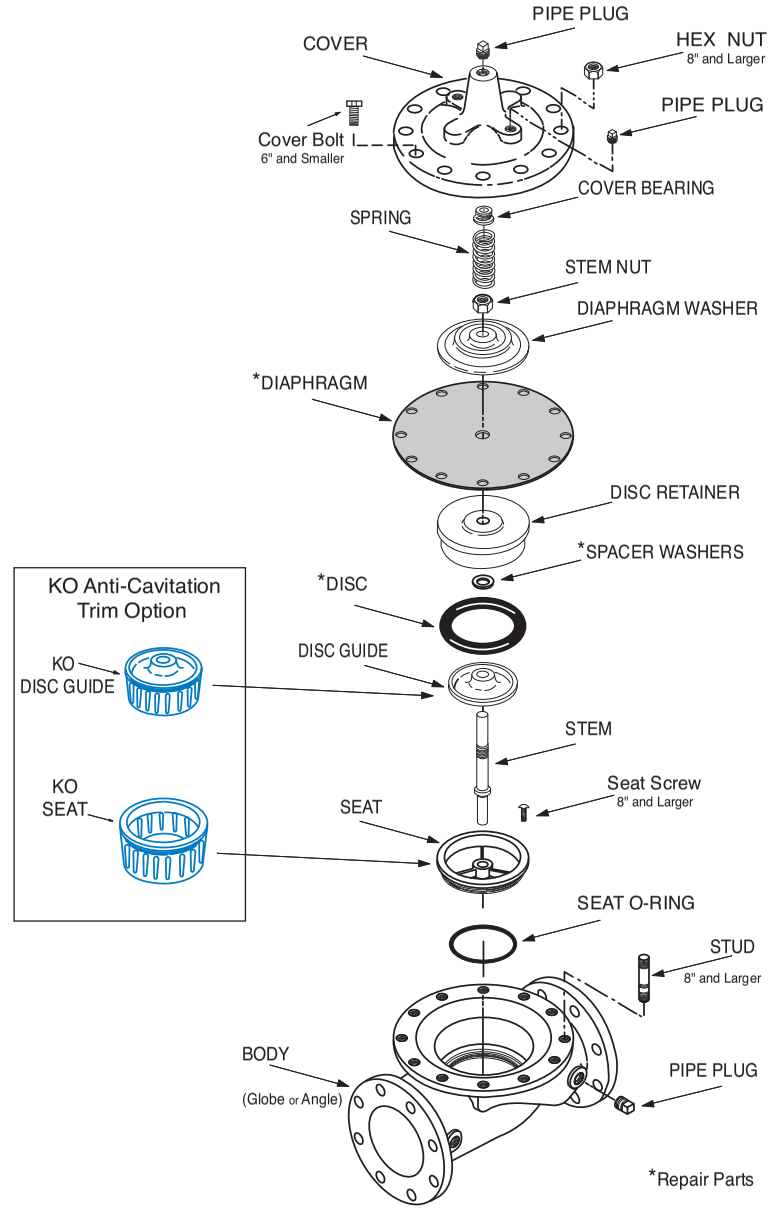

© Copyright Cla-Val 2014 Printed in USA Specifications subject to change without notice.

CLA-VAL

— MODEL — **100-20**
(Reduced Internal Port)

600 Series Hytrol Valve

SERVICE AND MAINTENANCE OF 600 SERIES VALVES

The 600 series main valves have only one part -the body- that is different from standard 100 Series Cla-Val main valve parts. The remaining parts of the 600 series main valve are standard Cla-Val main valve parts. All service and maintenance information for the standard 100 Series main valves in this manual also apply to the 600 series main valves.

The most important thing to remember when ordering main valve repair kits and replacement parts, except for the body, all other parts are going to be for a smaller size main valve. Cla-Val identifies main valve parts with the flange size of the standard 100 Series main valve. Refer to the "Main Valve Sizes Comparison" chart. For example, if you are servicing a 6" 100-20 Hytrol and needed a repair kit, you would order a repair kit for a 4" 100-01 Hytrol. This kit is also suitable for a 6" 100-20 Hytrol. Complete Technical Manuals include a repair kit data sheet N-RK that shows this relationship.

When you order repair parts, it is a good idea to include valve nameplate data (size, catalog number, and part number) and description of the parts desired. Do this to be sure parts will fit the valve you are working on and not be too big for it. Pilot controls and repair kits maintenance information remain the same for 100 or 600 Series valves.

UNDERSTANDING THE 600 SERIES VALVES

In 1987, Cla-Val introduced the Model 100-20 Hytrol as the basic main valve for the 600 Series of automatic control valves. To identify all new valves using the 100-20 Hytrol, an existing catalog number is modified. Making a 600 Series catalog number is simply done by using a "6" in front of the two digit catalog numbers or replacing the "2" with a "6" in three digit catalog numbers. Current schematics reflect both catalog numbers together separated by a slash (i.e. - 90-01/690-01, 58-02/658-02, 210-01/610-01, etc). Since these two valves 'share' the same catalog number and schematic, they provide the same function in a system. The only difference between the two valves is the relative capacity of the two main valve series.

The 100-01 Hytrol is the basic main valve for Cla-Val automatic control valves. This valve is the current version of the Clayton Hytrol valve design originated in 1936. The 100-01 Hytrol is designed as a full flow area valve. This means that the inlet, seat and outlet openings are the same size. Thus, the pressure drop is kept to a minimum for this globe style design.

The 100-20 Hytrol valve has all of the basic features and advantages of the original 100-01 Hytrol. Only one part has been changed - the body. It is designed with different size inlet, seat and outlet openings. The 100-20 Hytrol has inlet and outlet flanges one valve size larger than the seat opening size. This results in what is sometimes called a "reduced port' main valve. For example, a 4" 100-20 valve has a 3" seat. Note: valve size is always determined by the flange size. The following chart compares the 100-01 and the 100-20 main valves.

Basic Main Valve Size Comparison		
Globe Pattern Valves		
Flange Size (inch)	Seat Size	
	100-01 (100 Series)	100-20 (600 Series)
3	3	2
4	4	3
6	6	4
8	8	6
10	10	8
12	12	10
14	14	----
16	16	12
18	----	16
20	20	16
24	24	16
30	30	24
36	36	30
42	----	36
48	----	36
Angle Pattern Valves		
Flange Size (inch)	Seat Size	
	100-01 (100 Series)	100-20 (600 Series)
4	4	3
6	6	4
8	8	6

The 100-20 Hytrol is available only in ductile iron, 150 and 300 pressure class, and Bronze trim standard. Available extra cost main valve options include stainless steel trim, epoxy coating, Dura-Kleen stem, Delrin sleeved stem, and high temperature rubber parts. All four basic main valves have a 600 Series version available with all of the same benefits and size relationships. The following chart shows the relationship of Cla-Val main valve catalog numbers.

Cla-Val Main Valves

Catalog Name	Catalog Number		
	Circa 1936	100-Series	600 Series
Hytrol	100 (Angle =2100)	100-01	100-20
Powertrol	100P & 100PA	100-02	100-21
Powercheck	100PC & 100PCA	100-03	100-22
Hycheck	181	100-04	100-23

100-20

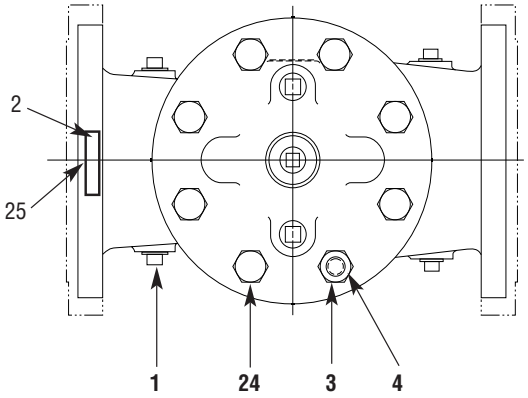

TOP VIEW

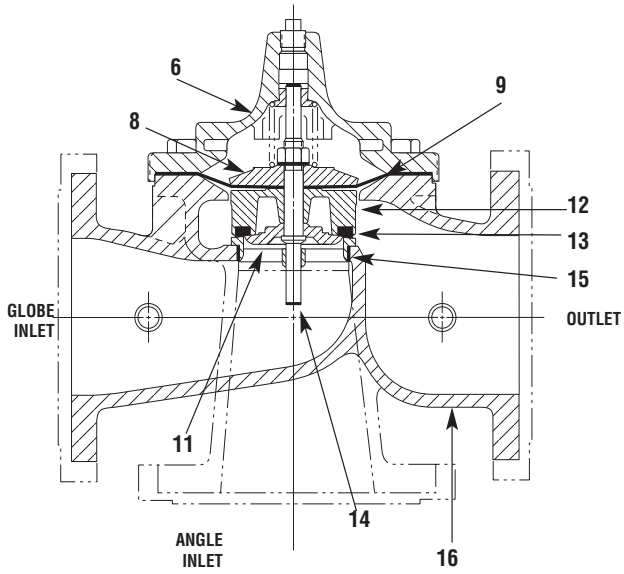

PARTS LIST	
NO.	**DESCRIPTION**
1	Pipe Plug
2	Drive Screws (for nameplate)
3	Hex Nut (8" and larger)
4	Stud (8" and larger)
5	Cover Bearing
6	Cover
7	Stem Nut
8	Diaphragm Washer
9	Diaphragm
10	Spacer Washers
11	Disc Guide
12	Disc Retainer
13	Disc
14	Stem
15	Seat
16	Body
17	Spring
22	Flat Head Screws (10" and larger)
23	Seat O-Ring
24	Hex Bolt (3 " Thru 6")
25	Nameplate (Mounted on inlet flange)
26	Upper Spring Washer (Epoxy coated valves only)
27	Lower Spring Washer (Epoxy coated valves only)
28	Cover Bearing Housing (20" & 24" & 30")
29	Cover Bearing Housing O-Ring (20"& 24" & 30")
30	Hex Bolt (20" & 24")
31	Pipe Cap (20" & 24 & 30"")

WHEN ORDERING PARTS, BE SURE TO GIVE COMPLETE NAMEPLATE DATA, ITEM NUMBER AND DESCRIPTION.

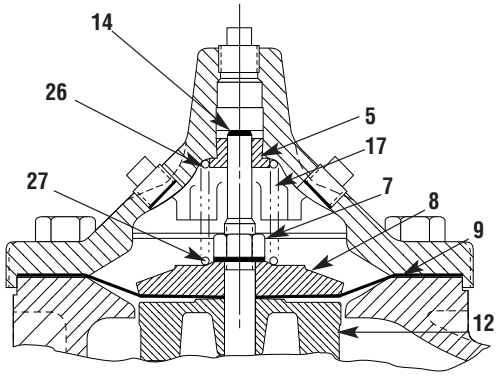

3" — 6" COVER DETAIL

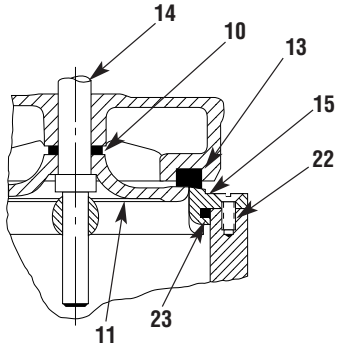

10" — 24" SEAT DETAIL

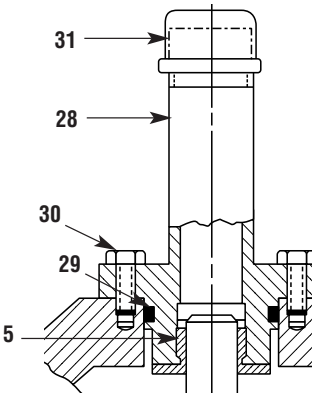

20" — 24" COVER DETAIL

©Copyright Cla-Val 2011 Printed in USA Specifications subject to change without notice.

REVISIONS			
REV	DESCRIPTION	DATE	APPROVED
A	REDRAWN TO UPDATE (ECO 4735)	4-12-83	WEP
B	REPLACED ITEMS 11 (NIPPLE) & ITEM 12 (REDUCER) WITH MACHINED PART ITEM 11 & REDRAWN ON CAD (ECO 15476)	6-7-95	EK

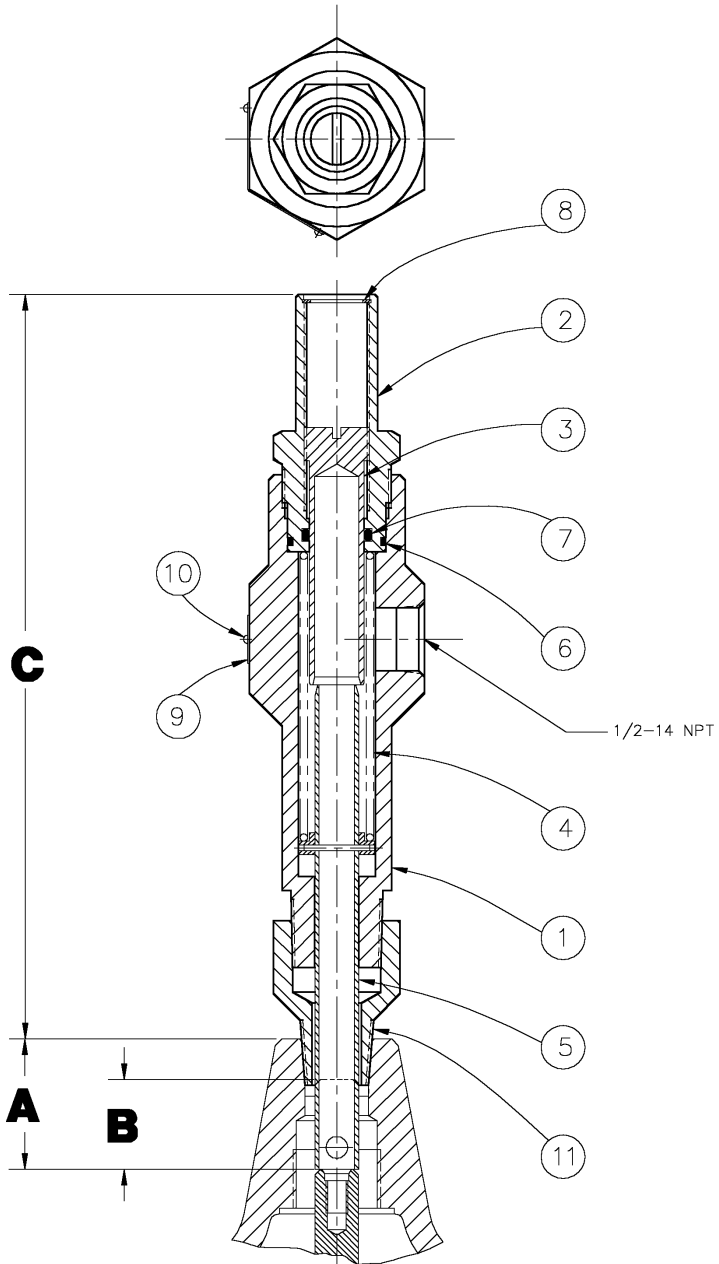

3" SIZE SHOWN

DIMENSIONAL TABLE			
VALVE SIZE	A	B TRAVEL	C
2 1/2"	1.357 1.567	.624 .804	8.50 8.75
3"	1.369 1.489	.765 .905	8.50 8.75

ITEM NO.	QTY REQD	NOMENCLATURE OR DESCRIPTION
11	1	REDUCER (3/4" X 1/2")
10	2	SCREW, DRIVE
9	1	NAMEPLATE
8	1	RING, RETAINER
7	1	O-RING
6	1	O-RING
5	1	TUBE ASSEMBLY, SENSING
4	1	SPRING
3	1	TUBE, ADJUSTING
2	1	HOUSING, ADJUSTING TUBE
1	1	BODY

PARTS LIST

UNLESS OTHERWISE SPECIFIED DIMENSIONS ARE IN INCHES
TOLERANCES ARE:
FRACTIONS ±1/32 DECIMALS .XX±.03 .XXX±.010 ANGULAR ±.5°
SURFACE FINISH 125
BREAK CORNERS .010 MAX
--DO NOT SCALE DRAWING--

CONTRACT NO. — — — — — —

APPROVALS		DATE
DRAWN	W.E.PATTON	4-12-83
CHECKED	MGR	5-6-83
APPROVED	CH	5-27-83
ENGR		

CLA-VAL CO. NEWPORT BEACH, CALIFORNIA

TITLE 2 1/2" & 3" X102F FLOW LIMITER (100-01)

SIZE	CAGE CODE	DWG NO.	REV.
C	86184	92379	B

SCALE 1/1 UNITS/PC SHEET 1 OF 1

EK 6-23-95

DWG NO. 92379 SH 1 REV B

DIST. CODE 007A

—MODEL— **X101**

Valve Position Indicator & Pilot System Components

- **Positive Visual Indicator**
- **Frictionless**
- **Leak Proof**
- **Easy Maintenance and Cleaning**
- **Protected Indicator Rod**

The Cla-Val Model X101 Visual Position Indicator is designed to display Cla-Val valve position quickly and easily. A solid brass indicator rod fastened directly to the valve stem moves up and down inside a pyrex tube. The tube is contained within a brass housing which is open on two opposite sides to permit clear vision of the indicator rod.

To purge air that may be trapped in the valve cover, a vent valve in the top of the housing is provided. Model X101 valve position indicator is furnished complete for installation on specified size Cla-Val Automatic Control Valve.

Dimensions

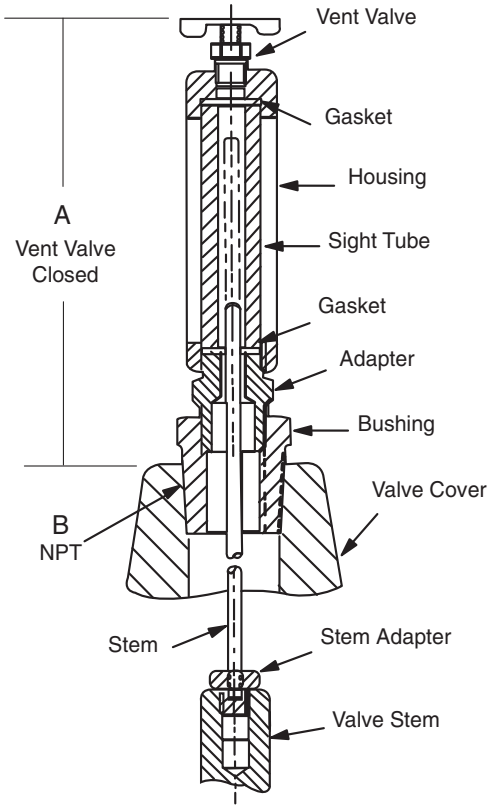

VALVE SIZE	A INCHES	B NPT
1"	5.88	1/4"
1 1/4"	3.21	1/4"
1 1/2"	3.21	1/4"
2"	3.33	1/2"
2 1/2"	3.33	1/2"
3"	3.33	1/2"
4"	4.52	3/4"
6"	4.52	3/4"
8"	5.83	1"
10"	7.70	1"
12"	8.20	1 1/4"
14"	8.20	1 1/2"
16"	10.81	2"
18"	12.04	1"
20"	12.04	1"
24"	12.04	1"

Dimension "A" is height added to valve by indicator assembly

Specifications

Sizes:	1" thru 24"
Materials:	Brass, Pyrex Tube
Pressure Rating:	400 psi
Optional Material:	Stainless Steel

Installation

Can be installed on any Cla-Val basic main valve in a few minutes. Simply replace the fitting on top of the valve cover with the indicator assembly.

When Ordering, Please Specify

1. Valve Size
2. Catalog No. X101
3. Valve Series No. (Appears on Valve Nameplate)
4. Optional Material
   Stainless Steel

CSM-11 Solenoid Control

Body Material

Standard: Bronze with Monel Trim

Option: Bronze with Stainless Steel Trim

CDS6A Altitude Control

Wetted Body Material

Standard: Bronze with Stainless Steel Trim

No. of Springs	Altitude Ranges
1	5 - 40 ft
2	30 - 80 ft
3	70 - 120 ft
4	110 - 160 ft
5	150 - 200 ft

CDC-1 Check Valve

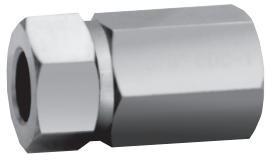

Size	Body Material	Trim Material
3/8"-1/2"	Brass	Delrin

CSC Swing Check Valve

Size	Body Material	Trim Material
3/8"-1"	Brass	Brass/Buna N

CN Series - Needle Valves

Size	Body Material	Trim Material
1/4"-1"	Standard: Bronze	Brass
	Option: Stainless Steel	Stainless Steel

CK Series - Isolation Valve

Size	Body Material	Trim Material
3/8"-1"	Standard: Bronze	Stainless Steel/Teflon
	Option: Stainless Steel	Stainless Steel/Teflon

CLA-VAL

1701 Placentia Ave. Costa Mesa, CA 92627
Phone: 949-722-4800 • Fax: 949-548-5441

CLA-VAL CANADA
4687 Christie Drive
Beamsville, Ontario
Canada L0R 1B4
Phone: 905-563-4963
Fax: 905-563-4040

CLA-VAL EUROPE
Chemin dés Mesanges 1
CH-1032 Romanel/
Lausanne, Switzerland
Phone: 41-21-643-15-55
Fax: 41-21-643-15-50

www.cla-val.com

©COPYRIGHT CLA-VAL 2017 Printed in USA
Specifications subject to change without notice.

E-X101 (R-04/2018)

Represented By:

X101

Valve Position Indicator

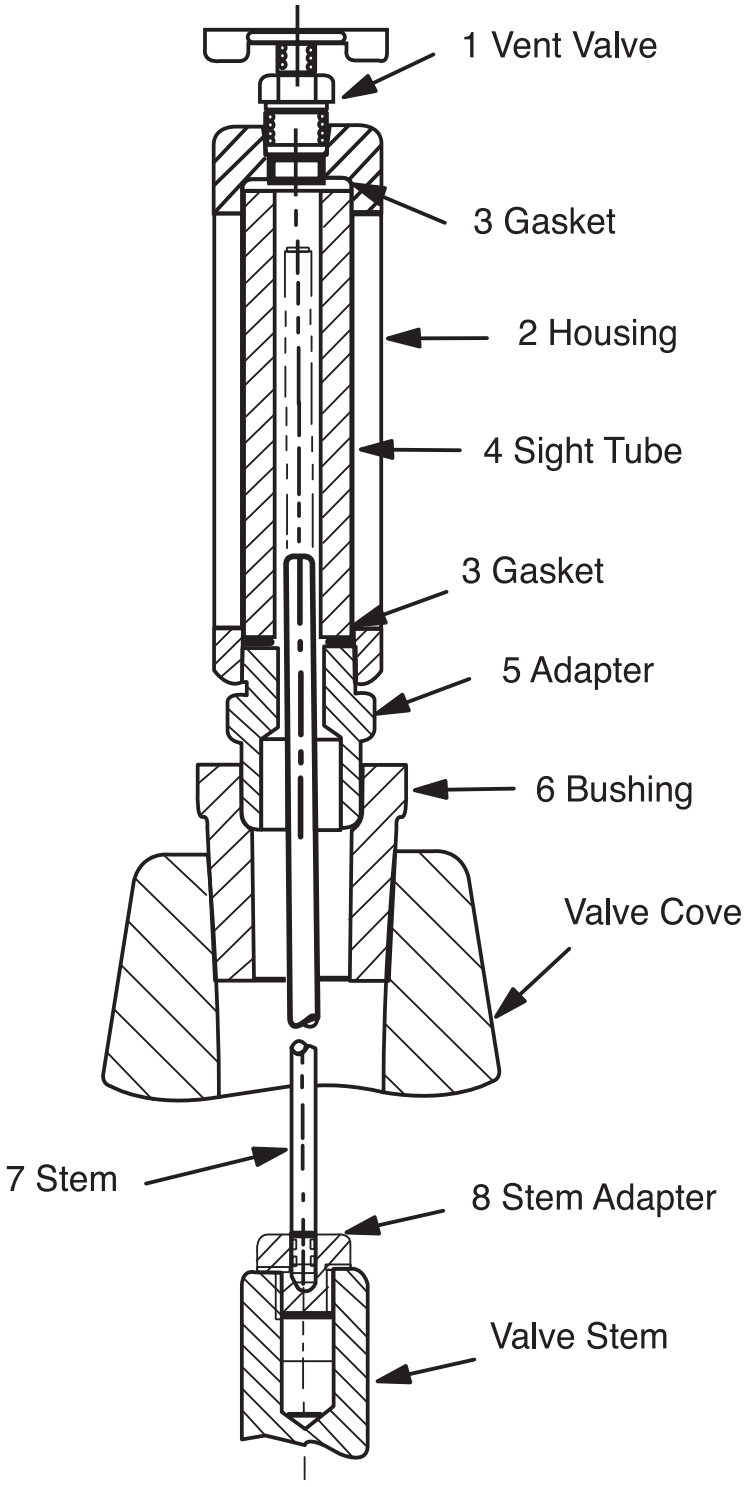

COMPLETE X101	
Size	**Stock No.**
1 1/4 - 1 1/2	C2812A
2	C8972G
2 1/2	C2607E
3	C2609A
4	9710001A
6	9710002J
8	C8581F
10	C9187A
12	31420D
14	30256C
16	30251D

ITEM	DESCRIPTION	MATERIAL
1	Vent Valve	Brass
2	Housing	Brass
3	*Gasket (2 Required)	Buna-N®
4	*Sight Tube	Pyrex
5	Adapter	Brass
6	Busing	Brass
7	Stem	Brass
8	Stem Adapter	Brass

When ordering parts, please specify:
- All Nameplate data
- Item Number
- Description
- Material
- Part Number

CLA-VAL P.O. Box 1325 • Newport Beach, CA 92659-0325 • Phone: 949-722-4800 • Fax: 949-548-5441 • E-mail: claval@cla-val.com • Website cla-val.com
©Copyright Cla-Val 2011 Printed in USA Specifications subject to change without notice.

CLA-VAL CO. NEWPORT BEACH, CALIFORNIA

CATALOG NO.	DRAWING NO.	REV
	67783	BD

TYPE OF VALVE AND MAIN FEATURES

CK2 COCK/BALL VALVE

DESIGN		
DRAWN	MGR	4-02-80
CHK'D	KD	4-03-80
APV'D	CH	4-07-80

SCALE: NONE

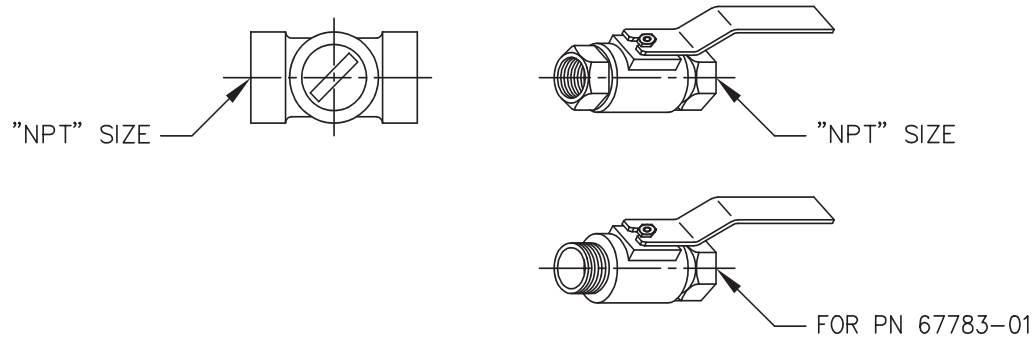

CLA-VAL PART NO. AND MATERIAL

BRONZE WITH HANDLE	STEEL WITH HANDLE	IRON WITH HANDLE	316 SST WITH HANDLE	316 SST W/ LOCKING HANDLE	BRONZE WITH HANDLE	MONEL WITH HANDLE	MONEL W/ LOCKING HANDLE	SIZE "NPT"
67783-01K*	-09C	-17F	-25J SUPSD BY-26G		-41F SUPSD BY-01K			1/8"
-02H	-10A	-18D	-26G	-51E SUPSD BY-26G -52C	-42D SUPSD BY-02H	-55F		1/4"
-03F* -59H***	-11J	-19B	-27E	-46E SUPSD BY-27E -53A	-45G -57B**	-48A SUPSD BY-49J	-63K	3/8"
-04D -60F ***	-12G	-20K	-28C	-54J	-43B SUPSD BY-04D	-49J	-62B	1/2"
-05A -61D ***	-13E	-21H	-29A	-64H	-44K SUPSD BY-05A	-56D		3/4"
-06J	-14C	-22F	-30J			-58K		1"
-07G	-15K	-23D	-31G					1 1/4"
-08E	-16H	-24B	-32E					1 1/2"
-50G			-47C					2"

* SEE ENGINEERING APPROVED VENDORS TABLE (SHEET 2 OF 2).

** HAMMOND VALVE 8501 ONLY.

*** WILKINS CK2 (SEE SHEET 2 OF 2)

CAD REVISION RECORD – DO NOT REVISE MANUALLY

LTR	DESCRIPTION	BY	DATE
A-AY	SEE REVISION FILE		
BA	ADDED PN'S 67783-59H, 67783-60F & 67783-61D (ECO 20434)	AK	03-14-06
BB	ADDED PN'S 67783-62B (NED 62200)	AK	07-10-08
BC	ADDED PN'S 67783-63K (NED 62218)	AK	08-14-08
BD	ADDED PN 67783-64H (NED 62446)	PC	10-1-2008

"THIS DRAWING IS THE PROPERTY OF CLA-VAL CO. AND SAME AND COPIES MADE THEREOF, IF ANY, SHALL BE RETURNED TO IT UPON DEMAND. DELIVERY AND DISCLOSURE HEREOF ARE SOLELY UPON CONDITION THAT THE SAME SHALL NOT BE USED, COPIED OR REPRODUCED, NOR SHALL THE SUBJECT HEREOF BE DISCLOSED IN ANY MANNER TO ANYONE FOR ANY PURPOSE, EXCEPT AS HEREIN AUTHORIZED, WITHOUT PRIOR WRITTEN APPROVAL OF CLA-VAL CO. THIS DRAWING IS SUBMITTED CONFIDENTIALLY AND MAY NOT BE USED IN THE MANUFACTURE OF ANY MATERIAL OR PRODUCT OTHER THAN SUCH MATERIALS AND PRODUCTS FURNISHED TO CLA-VAL CO. WHETHER OR NOT THE EQUIPMENT OR INFORMATION SHOWN HEREON IS PATENTED OR OTHERWISE PROTECTED, FULL TITLE AND COPYRIGHTS, IF ANY, IN AND TO THIS DRAWING AND/OR INFORMATION DELIVERED OR SUBMITTED ARE FULLY RESERVED CLA-VAL CO."

CLA-VAL

—MODEL —

100-01
3/8"-1 Hytrol Valve

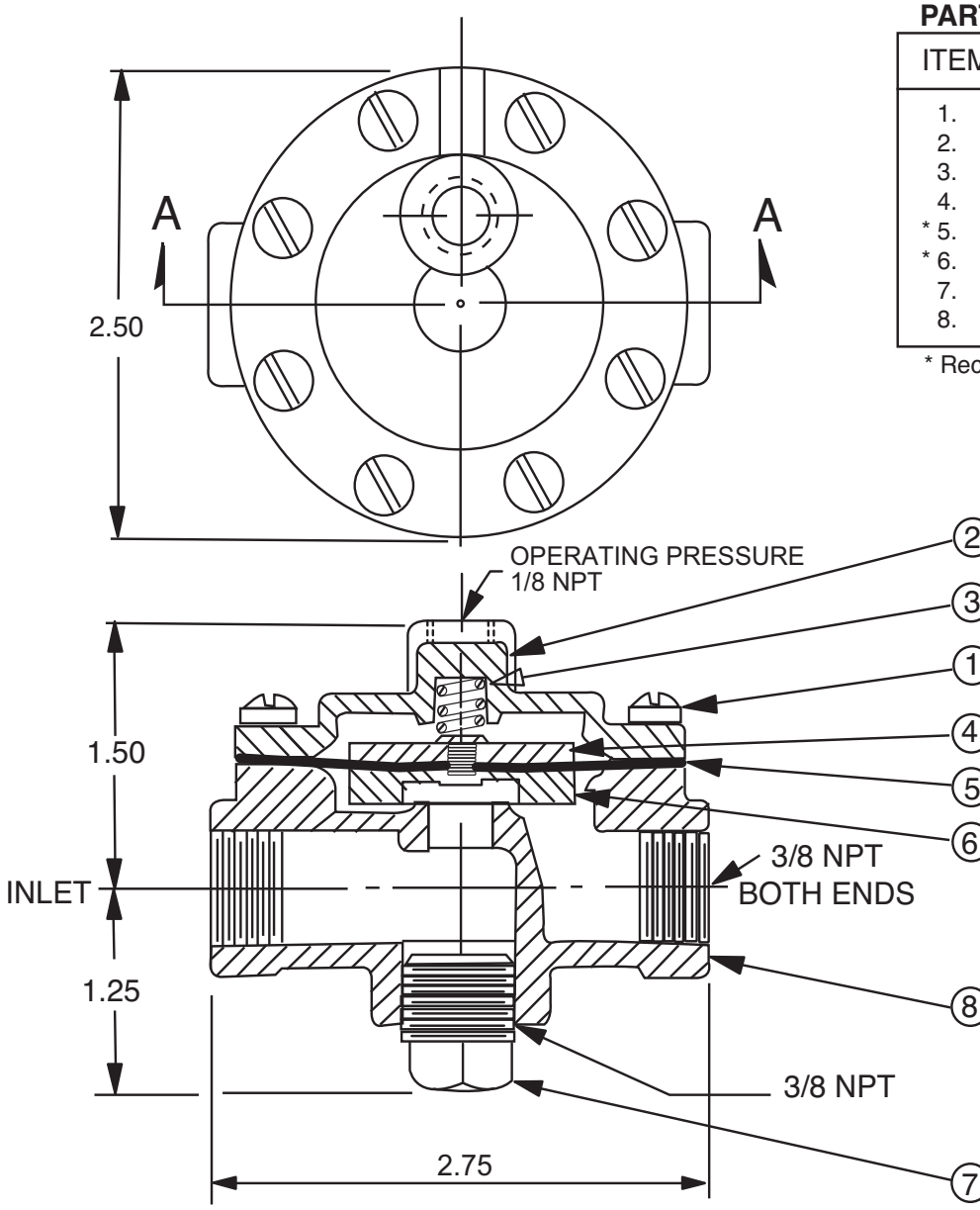

SECTION AA

100-01 3/8" HYTROL VALVE

PARTS LIST

ITEM	DESCRIPTION
1.	Cover Screw (8 Required)
2.	Cover
3.	Spring
4.	Diaphragm Washer
* 5.	Diaphragm
* 6.	Disc Retainer Assembly
7.	Body Plug (3/8 NPT)
8.	Body

* Recommended Spare Parts

When Ordering parts, please specify
- All nameplate data
- Description
- Item Number
- Material

CLA-VAL

—MODEL—100-01
1/2"-3/4"-1" Hytrol Valve

100-01 3/4" & 1/2" Hytrol Valve

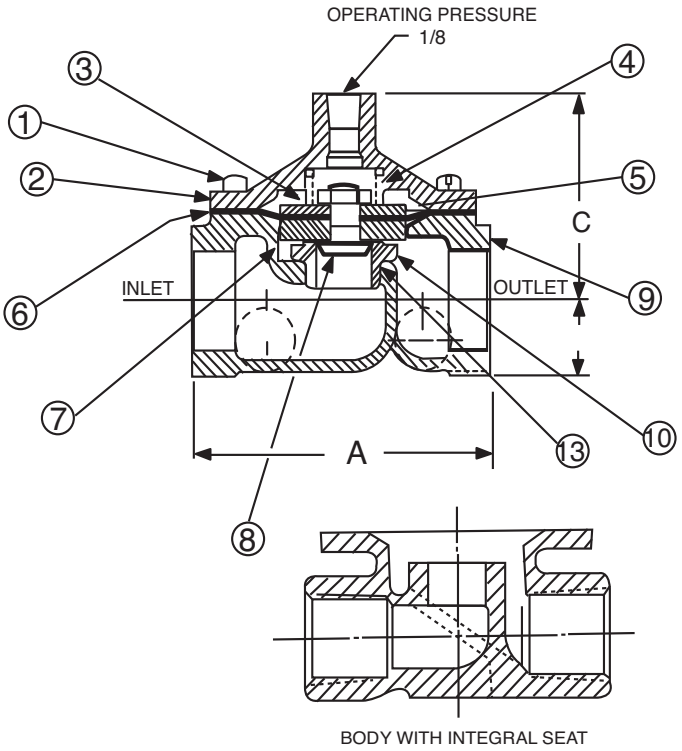

PARTS LIST

ITEM	DESCRIPTION
1	COVER SCREW
2	COVER
3	SPRING
4	STEM NUT
5	DIAPHRAGM WASHER
* 6	DIAPHRAGM
* 7	DISC RETAINER ASSEMBLY
8	DISC GUIDE & STEM
9	BODY
10	SEAT
11	NAMEPLATE
12	BODY PLUG HEX HD.
13	O-RING SEAT (FOR OLD STYLE BODY ONLY)

* Recommended Spare Parts

	1/2	3/4
A	1-7/16	3-1/2
C (MAXIMUM)	2-3/8	2-3/8
D	25/32	29/32

When Ordering parts, please specify
- All nameplate data
- Description
- Item Number
- Material

100-01 1" Hytrol Valve

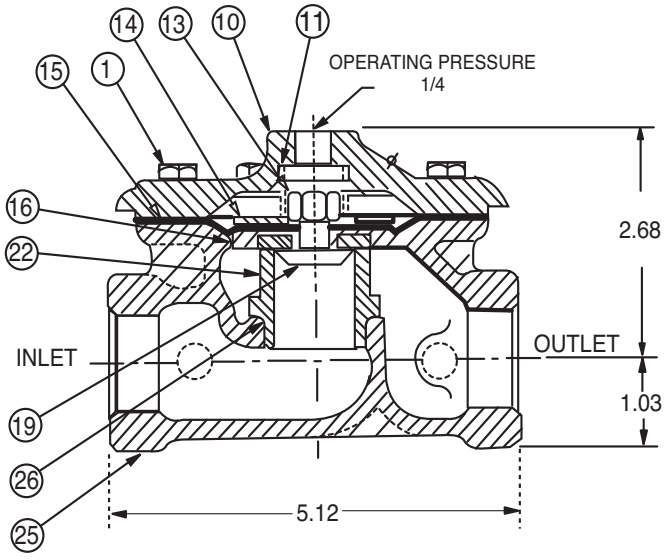

PARTS LIST

ITEM	DESCRIPTION
1	COVER SCREW
2	NAMEPLATE
3	NAMEPLATE SCREW
10	COVER
11	SPRING
13	STEM NUT
14	DIAPHRAGM WASHER
15	DIAPHRAGM
16	DISC RETAINER ASSEMBLY
19	DISC GUIDE
22	SEAT
24	BODY PLUG
25	BODY
26	O-RING, SEAT

* Recommended Spare Parts

CLA-VAL P.O. Box 1325 • Newport Beach, CA 92659-0325 • Phone: 949-722-4800 • Fax: 949-548-5441 • E-mail: claval@cla-val.com • Website cla-val.com
© Copyright Cla-Val 2012 Printed in USA Specifications subject to change without notice.

CLA-VAL

— MODEL — **CRL**

Pressure Relief Control

DESCRIPTION

The CRL Pressure Relief Control is a direct acting, spring loaded, diaphragm type relief valve. It may be used as a self-contained valve or as a pilot control for a Cla-Val Main valve. It opens and closes within very close pressure limits.

INSTALLATION

The CRL Pressure Relief Control may be installed in any position. The control body (7) has one inlet and one outlet port with a side pipe plug (24) at each port. These plugs are used for control connections or gauge applications. The inlet in the power unit body (6) is the sensing line port. A flow arrow is marked on the body casting.

OPERATION

The CRL Pressure Relief Control is normally held closed by the force of the compression spring above the diaphragm; control pressure is applied under the diaphragm.

When the controlling pressure exceeds the spring setting, the disc is lifted off its seat, permitting flow through the control.

When controlling pressure drops below spring setting, the spring returns the control to its normally closed position.

ADJUSTMENT PROCEDURE

The CRL Pressure Relief Control can be adjusted to provide a relief setting at any point within the range found on the nameplate.

Pressure adjustment is made by turning the adjustment screw (9) to vary the spring pressure on the diaphragm. Turning the adjustment screw clockwise increases the pressure required to open the valve. Counterclockwise decreases the pressure required to open the valve.

When pressure adjustments are complete the jam nut (10) should be tightened and the protective cap (1) replaced. If there is a problem of tampering, lock wire holes have been provided in cap and cover. Wire the cap to cover and secure with lead seal.

DISASSEMBLY

The CRL Pressure Relief Control does not need to be removed from the line for disassembly. Make sure that pressure shut down is accompanied prior to disassembly. If the CRL is removed from the line for disassembly be sure to use a soft jawed vise to hold body during work.

Refer to Parts List Drawing for Item Numbers.

1. Remove cap (1), loosen jam nut (10) and turn adjusting screw counterclockwise until spring tension is relieved.
2. Remove the eight screws (4) holding the cover (3) and powerunit body (6). Hold the cover and powerunit together and place on a suitable work surface.
   See NOTE under REASSEMBLY.
3. Remove the cover (3) from powerunit body (6). The spring (12) and two spring guides (11).
4. Remove nut (13) from stem (19) and slide off the belleville washer (14), the upper diaphragm washer (15) and the diaphragm (16).
5. Pull the stem (19) with the disc retainer assembly (21) through the bottom of powerunit. The lower diaphragm washer (17) will slide off of stem top.
6. Remove jam nut (23) and disc retainer assembly (21) from stem. Use soft jawed pliers or vise to hold stem. The polished surface of stem must not be scored or scratched.
7. The seat (22) need not be removed unless it is damaged. If removal is necessary use proper size socket wrench and turn counterclock wise.
   Note: Some models have an integral seat in the body (7).

INSPECTION

Inspect all parts for damage, or evidence of cross threading. Check diaphragm and disc retainer assembly for tears, abrasions or other damage. Check all metal parts for damage, corrosion or excessive wear.

REPAIR AND REPLACEMENT

Minor nicks and scratches may be polished out using 400 grit wet or dry sandpaper fine emery or crocus cloth. Replace all O-rings and any damaged parts.

When ordering replacement parts, be sure to specify parts list item number and all nameplate data.

REASSEMBLY

In general, reassembly is the reverse of disassembly. However, the following steps should be observed:

1. Lubricate the O-Ring (18) with a small amount of a good grade of waterproof grease, (Dow Corning 44 medium grade or equal). Use grease sparingly and install O-ring in powerunit body (6).
2. Install stem (19) in powerunit body (6). Use a rotating motion with minimum pressure to let stem pass through O-ring.
   Do Not Cut O-Ring.
3. Install O-ring (5) at top of stem (19). Place lower diaphragm washer (17) on the stem with the serrated side up. Position diaphragm (16), upper diaphragm washer (15), with serration down, and belleville washer (14) with concave side down.
4. Position powerunit body (6) as shown on parts list drawing (top view).
5. Continue reassembly as outlined in disassembly steps 1 through 3.

Note: Item (4) Screw will have a quantity of 8 for the 0-75 and 20-200psi design and a quantity of 4 for the 100-300psi design. Item (25) Screw is used on the 100-300psi design only. Install item (25), before item (4) for preload of item (12) spring.

SYMPTOM	PROBABLE CAUSE	REMEDY
Fails to open.	Controlling pressure too low.	Back off adjusting screw until valve opens.
Fails to open with spring compression removed.	Mechanical obstruction, corrosion, scale build-up on stem.	Disassemble, locate,and remove obstruction, scale.
Leakage from cover vent hole when controlling pressure is applied.	Diaphragm Damage	Disassembly replace damaged diaphragm.
	Loose diaphragm assembly.	Tighten upper diaphragm washer.
Fails to close.	No spring compression.	Re-set pressure adjustment.
Fails to close with spring compressed.	Mechanical obstruction.	Disassemble, locate and remove obstruction.

CLA-VAL P.O. Box 1325 • Newport Beach, CA 92659-0325 • Phone: 949-722-4800 • Fax: 949-548-5441 • E-mail: claval@cla-val.com • Website cla-val.com
©Copyright Cla-Val 2011 Printed in USA Specifications subject to change without notice.

CRL

1/2" & 3/4" PRESSURE RELIEF CONTROL

(Bronze Body with 303SS Trim)

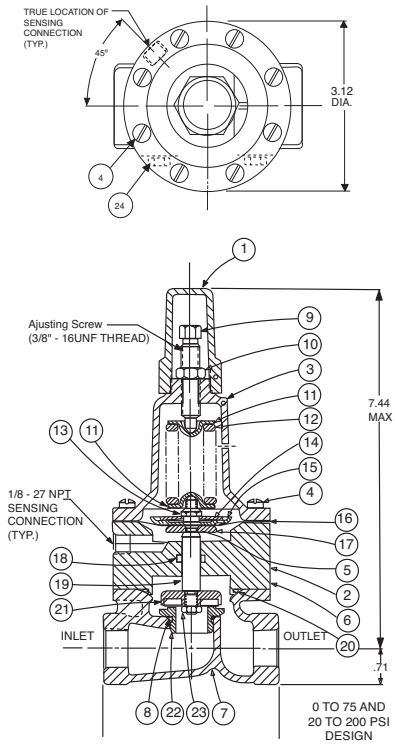

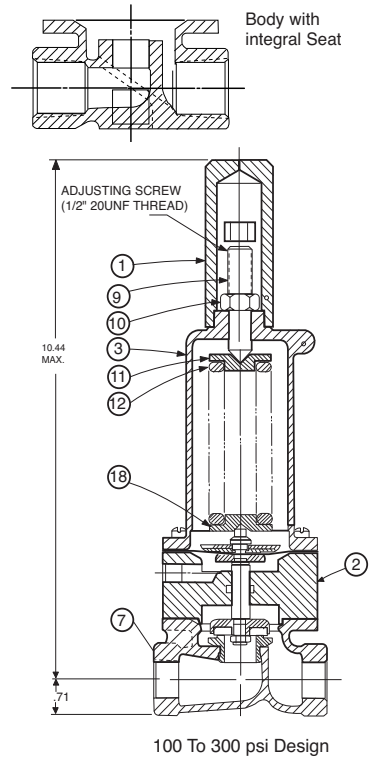

SIZE	SPRING	PART NUMBER
1/2”	0-75 PSI	7922201E
1/2”	20-105 PSI	7922205F
1/2”	20-200 PSI	7922202C
1/2”	100-300 PSI	8280901D
3/4”	0-75 PSI	7922901K
3/4”	20-105 PSI	7922903F
3/4”	20-200 PSI	7922902H
3/4”	100-300 PSI	8600501E
For 250-600 PSI Contact Factory		

CRL Range PSI	APPROX. INCREASE FOR EACH CLOCKWISE TURN OF ADJUSTING SCREW
0 to 75	8.5 PSI
20 to 105	12.5 PSI
20 to 200	28.0 PSI
100 to 300	18.0 PSI

When ordering parts please specify:
1. All Nameplate Data
2. Item Part Number
3. Item Description

Item	Description	Material	Part Number	Part Number	Part Number	Part Number
			0-75	**20-105**	**20-200**	**100-300**
1	Cap	Plastic	67628J	67628J	67628J	1257601D
2	Nameplate	Brass	--	--	--	--
3	Cover	Bronze	C2544K	C2544K	C2544K	44587E
4*	Screw Fil. Hd. 10-32 x 1.88 (Qty 8)	303 SS	6757867E	6757867E	6757867E	6757867E
5*	O-Ring	Rubber	00902H	00902H	00902H	00902H
6	Body, Powerunit	Bronze	7920504D	7920504D	7920504D	7920504D
7	1/2” Body	Bronze	C7928K	C7928K	C7928K	C7928K
	3/4” Body	Bronze	C9083B	C9083B	C9083B	C9083B
8*	O-Ring, Seat	Rubber	00718H	00718H	00718H	00718H
9	Screw, Adjusting	Brass	7188201D	7188201D	7188201D	82811B
10	Nut Hex (Locking)	303 SS	6780106J	6780106J	6780106J	6780606H
11	Guide, Spring	303 SS	71881H	71881H	71881H	1630301J
12	Spring	CHR/VAN	71884B	20632101E	71885J	1630201A
13	Nut, Stem Upper	Bronze	73034B	73034B	73034B	73034B
14	Washer, Belleville	Steel	7055007E	7055007E	7055007E	7055007E
15	Washer, Diaphragm (upper)	303 SS	71891G	71891G	71891G	71891G
16*	Diaphragm	Rubber	C1505B	C1505B	C1505B	C1505B
17	Washer, Diaphragm (lower)	303 SS	45871B	45871B	45871B	45871B
18*	O-Ring, Stem	Rubber	00746J	00746J	00746J	00746J
19	Stem	303 SS	8982401F	8982401F	8982401F	8982401F
20*	O-Ring, Body	Rubber	00767E	00767E	00767E	00767E
21*	Retainer Assembly, Disc	303 SS	C9158B	C9158B	C9158B	C9158B
22	Seat	303Rub	62187A	62187A	62187A	62187A
23	Nut, Hex, Stem, Lower	Bronze	6779806G	6779806G	6779806G	6779806G
24	Pipe Plug	Bronze	6784701C	6784701C	6784701C	6784701C
	FACTORY SET POINT		**50 PSI**	**60 PSI**	**60 PSI**	**100 PSI**
	REPAIR KIT*		9170007A	9170007A	9170007A	9170007A

CLA-VAL P.O. Box 1325 • Newport Beach, CA 92659-0325 • Phone: 949-722-4800 • Fax: 949-548-5441 • E-mail: claval@cla-val.com • Website cla-val.com
©Copyright Cla-Val 2011 Printed in USA Specifications subject to change without notice.

CLA-VAL

— MODEL — **CRA**

REMOTE SENSING TYPE

Pressure Reducing Control

DESCRIPTION

The CRA Pressure Reducing Control automatically reduces a higher inlet pressure to a lower outlet pressure. It is a direct acting, spring loaded, diaphragm type valve that operates hydraulically or pneumatically and is designed to sense pressure from a remote point. It may be used as a self-contained valve or as a pilot control for a Cla-Val Co. main valve. It will hold a constant downstream pressure at the remote sensing point within very close pressure limits.

OPERATION

The CRA Pressure Reducing Control is normally held open by the force of the compression spring above the diaphragm; delivery pressure acts on the underside of the diaphragm. Flow through the valve responds to changes in pressure at the the sensing point.

INSTALLATION

The CRA Pressure Reducing Control may be installed in any position. There is one inlet port and two outlets, for either straight or angle installation. The second outlet port can be used for a gauge connection. A flow arrow is marked on the body casting.

ADJUSTMENT PROCEDURE

The CRA Pressure Reducing Control can be adjusted to provide a delivery pressure range as specified on the nameplate.

Pressure adjustment is made by turning the adjustment screw to vary the spring pressure on the diaphragm. The greater the compression on the spring the higher the pressure setting.

1. Turn the adjustment screw in (clockwise) to increase delivery pressure.
2. Turn the adjustment screw out (counter-clockwise) to decrease the delivery pressure. When pressure adjustment is completed, tighten jam nut on adjustment screw and replace protective cap.

Flow rates are not critical during pressure setting. The approximate minimum flow rates given in the table are for the main valve on which the CRA is installed.

Valve Size	1 ¼"-3"	4"-8"	10"-16"
Minimum Flow GPM	15-30	50-200	300-650

MAINTENANCE

Disassembly

To disassemble follow the sequence of the item numbers assigned to parts in the sectional illustration.

Reassembly

Reassembly is the reverse of disassembly. Caution must be taken to avoid having the yoke (17) drag on the inlet nozzle of the body (18). Follow this procedure:

1. Place yoke (17) in body and screw the disc retainer assembly (16) until it bottoms.
2. Install gasket (14) and spring (19) for 2-30 psi range onto plug (13) and screw into body. Disc retainer must enter guide hole in plug as it is assembled. Screw the plug in by hand. Use wrench to tighten only.
3. Place gasket (25) and powertrol body (21) on yoke extension (17). Refer to sectional view for proper reassembly of (21) onto body (18).
4. Place lower diaphragm washer (24), "o" ring (22), diaphragm (12), upper diaphragm washer (11), and belleville washer (20) on yoke extension (17). Screw on diaphragm nut (10) finger tight.
5. Place two machine screws (4) through (21) (25) and screw into body (18). Do not include the diaphragm (12) in this operation. This holds parts aligned for next step, and allows the diaphragm to move and be properly located during tightening of nut (10).
6. Hold the diaphragm so that screw holes in the diaphragm (12) and powertrol body (21) align. Tighten diaphragm nut (10) with a wrench. At the final tightening release the diaphragm and permit it to rotate approximately 5° to 10°. The diaphragm holes should now be properly aligned with the body holes.

To check for proper alignment proceed as follows:

Rotate diaphragm clockwise and counterclockwise as far as possible. Diaphragm screw holes should rotate equal distance on either side of powertrol body screw holes ±1/8".

Repeat assembly procedure until diaphragm and yoke are properly aligned. There must be no contact between yoke and body nozzle during its normal opening and closing movement. To simulate this movement hold powertrol body and diaphragm holes aligned. Move yoke to open and closed positions. There must be no evidence of contact or dragging.

7. Remove machine screws per step 5.
8. Install spring (9) with spring guide (8) on top of spring.
9. Install cover (5) using eight machine screws (4).
10. Replace adjusting screw (2) and nut (3), then cap (1).

SYMPTOM	PROBABLE CAUSE	REMEDY
Fails to open when pressure lowers	No spring compression	Tighten adjusting screw
	Mineral buildup on yoke extension (17)	Disassemble and clean part, Replace "O" rings (22) and (23).
	Damaged spring	Disassemble and replace.
	Spring guide (8) is not in place	Disassemble and place guide (8) on top of spring (9).
	Yoke dragging on inlet nozzle	Disassembled and reassemble use procedure.
Fails to close when delivery pressure rises	Spring compressed	Back off adjusting screw
	Mineral deposit on yoke extension (17)	Disassemble and clean part. Replace "o" rings (22) and (23).
	Mechanical obstruction	Disassemble and remove obstruction
	Worn disc	Disassemble, remove and replace disc retainer assembly. (16)
	Yoke dragging on inlet nozzle	Refer to paragraph 6
Leakage from cover vent hole	Damaged diaphragm (12)	Disassemble and replace
	Loose diaphragm nut (10)	Remove cover and tighten nut

CLA-VAL P.O. Box 1325 • Newport Beach, CA 92659-0325 • Phone: 949-722-4800 • Fax: 949-548-5441 • E-mail: claval@cla-val.com • Website cla-val.com
©Copyright Cla-Val 2011 Printed in USA Specifications subject to change without notice.

CRA

REMOTE SENSING TYPE

Pressure Reducing Control

(Bronze Body with 303SS Trim)

When ordering parts specify:
- All nameplate data
- Description
- Item number

Size (inch)	Stock Number	SEAT DIA.	Adjustment Range(PSI)
3/8	7974406G	1/4	2 - 30
3/8	7974403D	1/4	15-75
3/8	7974409A	1/4	20 - 105
3/8	7974404B	1/4	30 - 300
Factory Set Pressure			**PSI per Turn***
	2 - 30 set @ 10 psi		3.0
	15 - 75 set @ 20 psi		9.0
	20 - 105 set @ 20 psi		12.0
	30 - 300 set @ 60 psi		27.0

*Approximate-Final Adjustment should be with a pressure gauge and with flow.

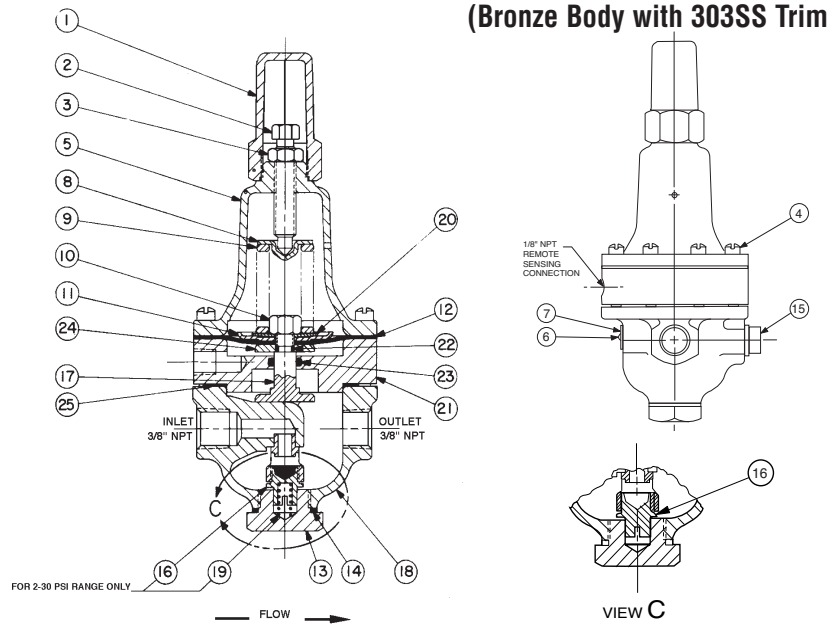

Item	Description	Material	Part Number	List Price
1	Cap	PL	67628J	
2	Adjusting Screw	BRS	7188201D	
3	Jam Nut (3/8-16)	303	6780106J	
4*	Machine Screw 10-32x1-1/4"(Fil.Hd.) 8 Req'd	SS	6757874A	
5	Cover	BRS	C2544K	
6	Nameplate Screw	SS	67999D	
7	Nameplate	BRS	C0022001G	
8	Spring Guide	302	71881H	
9	Spring (15-75 psi)	CHR/VAN	71884B	
	Spring (30-300 psi)	CHR/VAN	71885B	
	Spring (2 - 30 psi)	SS	81594E	
10	Hex Nut 5/16 - 18	303	71883D	
11	Diaphragm Washer (upper)	302	71891G	
12*	Diaphragm	NBR	C6936D	
13	Plug, Body	BRS	V5653A	
14*	Gasket	Fiber	40174F	
15	Plug, 3/8 NPT	BRS	6766003F	
16*	Disc Retainer Assy. (2 - 30 psi)	SS/Rub	C8348K	
	Disc Retainer Assy. (15 - 75 psi)	SS/Rub	37133G	
	Disc Retainer Assy. (20 - 105 psi)	SS/Rub	37133G	
	Disc Retainer Assy. (30 - 300 psi)	SS/Rub	37133G	
17	Yoke	VBZ	C1799A	
18	Body & Seat Assy, 1/4" Seat	BR/SS	8339701J	
19*	Bucking Spring (Required with 2 - 30psi)	302	V05586	
20	Belleville Washer	STL	7055007E	
21	Powertrol Body	BRS	C3388A	
22*	O-Ring	NBR	00708J	
23*	O-Ring	NBR	00746J	
24	Diaphragm Washer (lower)	BRS	C1804J	
25	Gasket	NBR	8059401D	
*	Repair Kit (No Bucking Spring)	Buna®-N	9170003K	
*	Repair Kit (with Bucking Spring)	Buna®-N	9170001D	

CLA-VAL P.O. Box 1325 • Newport Beach, CA 92659-0325 • Phone: 949-722-4800 • Fax: 949-548-5441 • E-mail: claval@cla-val.com • Website cla-val.com
©Copyright Cla-Val 2011 Printed in USA Specifications subject to change without notice.

DWG NO.	SH	REV
48833	1	Y

PARTS LIST

X58B ASSEMBLY STOCK NO.	ITEM NO. 1 ELBOW, TUBE FITTING				ITEM NO. 2 RESTRICTION PLUG		
	PART NO.	SIZE TUBE X NPT	MATERIAL	TYPE FITTING	PART NO.	MATERIAL	ORIFICE ø
82601G	82602E	1/4 X 1/8	BRASS	45° FLARE	82603C	DELRIN	.031
43033-01J	43034J	1/4 X 1/4	BRASS	45° FLARE	82603C	DELRIN	.031
43033A	43034J	1/4 X 1/4	BRASS	45° FLARE	43035F	DELRIN	.063
65727A	43399F	1/4 X 3/8	BRASS	45° FLARE	37816G	S.STEEL	.031
43395D	43399F	1/4 X 3/8	BRASS	45° FLARE	43396B	S.STEEL	.063
~~88542~~	~~43399F~~	~~1/4 X 3/8~~	~~BRASS~~	~~45° FLARE~~	~~42345~~	~~DELRIN~~	~~.063~~
40322A	40318J	3/8 X 1/8	BRASS	45° FLARE	C9447J	S.STEEL	.063
42344C	40318J	3/8 X 1/8	BRASS	45° FLARE	42345K	DELRIN	.063
42344-002	40318-008	3/8 X 1/8	BRASS	45° FLARE	42345-009	DELRIN	.063
C9445C	C9450C	3/8 X 1/4	BRASS	45° FLARE	C9446A	S.STEEL	.031
~~70344~~	~~70343K~~	~~3/8 X 1/4~~	~~S.STEEL~~	~~37° FLARE~~	~~83456E~~	~~DELRIN~~	~~.040~~
42781F	C9450C	3/8 X 1/4	BRASS	45° FLARE	42345K	DELRIN	.063
C9442K	C9449E	3/8 X 3/8	BRASS	45° FLARE	C9446A	S.STEEL	.031
42360J	C9449E	3/8 X 3/8	BRASS	45° FLARE	42361G	S.STEEL	.035
70374E	C9449E	3/8 X 3/8	BRASS	45° FLARE	83456E	DELRIN	.040
C9443H	C9449E	3/8 X 3/8	BRASS	45° FLARE	42345K	DELRIN	.063
~~39739~~	~~39740G~~	~~3/8 X 3/8~~	~~S.STEEL~~	~~37° FLARE~~	~~42345~~	~~DELRIN~~	~~.063~~
C9444-01D	48093-01H	3/8 X 3/8	SUPER DUPLEX SST	COMPRESSION	79912C	DELRIN	.125
C9444F	C9449E	3/8 X 3/8	BRASS	45° FLARE	79912C	DELRIN	.125
~~44963~~	~~39740G~~	~~3/8 X 3/8~~	~~S.STEEL~~	~~37° FLARE~~	~~79912G~~	~~DELRIN~~	~~.125~~
81065F	C9449E	3/8 X 3/8	BRASS	45° FLARE	43304F	DELRIN	.188
~~44999B~~	~~39740G~~	~~3/8 X 3/8~~	~~S.STEEL~~	~~37° FLARE~~	~~43304F~~	~~DELRIN~~	~~.188~~

REVISIONS

REV	DESCRIPTION	DATE	APPROVED
A-W	SEE REVISION FILE		
Y	ADDED ASSY STOCK NO. C9444-01D (ECO 24939)	2-11-15	AV

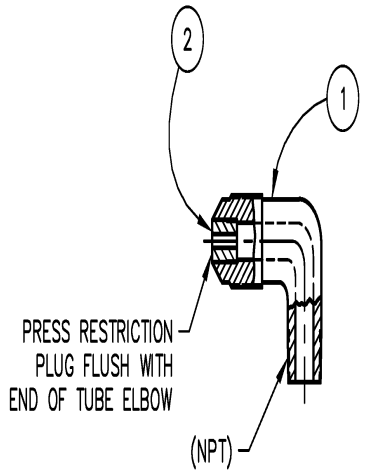

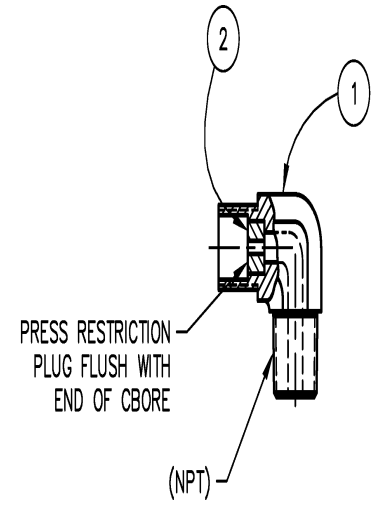

"This drawing is the property of CLA-VAL CO. and same and copies made thereof, if any, shall be returned to it upon demand. Delivery and disclosure hereof are made solely upon condition that the same shall not be used, copied or reproduced, nor shall the subject hereof be disclosed in any manner to anyone for any purpose, except as herein authorized, without prior written approval of CLA-VAL CO. This drawing is submitted confidentially and may not be used in the manufacture of any material or product other than such materials and products furnished to CLA-VAL CO. Whether or not the equipment or information shown hereon is patented or otherwise protected, full title and copyrights, if any, in and to this drawing and/or information delivered or submitted are fully reserved by CLA-VAL CO."

UNLESS OTHERWISE SPECIFIED DIMENSIONS ARE IN INCHES
TOLERANCES ARE:

FRACTIONS	DECIMALS	ANGULAR
± 1/32	.XX± .03	± .5°
	.XXX± .010	

MAX = +.00 -.09
MIN = +.09 -.00

SURFACE FINISH 125√
BREAK CORNERS .010 MAX
FILLET RADIUS .031

--DO NOT SCALE DRAWING--

CONTRACT NO. - - - - -

APPROVALS		DATE
DRAWN	JD	10-25-77
CHECKED	MDJ	10-26-77
APPROVED	MF	10-26-77
ENGR		

CLA-VAL CO. NEWPORT BEACH, CALIFORNIA

TITLE RESTRICTION ASSEMBLIES, X58B
ELBOW TYPE
WITH ORIFICE-PLUG ON TUBE END

SIZE	CAGE CODE	DWG NO.	REV
B	86184	48833	Y

SCALE NONE UNITS/PC SHEET 1 OF 1

DIST CODE 007

AV, 2-11-15

CVCL 1 2 3 4 DIST. CODE 007A SHEET 1 OF 1

CLA-VAL CO. NEWPORT BEACH, CALIFORNIA	CATALOG NO. CSC	DRAWING NO. 92667	REV. A

TYPE OF VALVE AND MAIN FEATURES

CSC SWING CHECK VALVE

DESIGN		
DRAWN	CH	11-5-76
CHK'D	MF	11-8-76
APV'D	JAZ	11-9-76

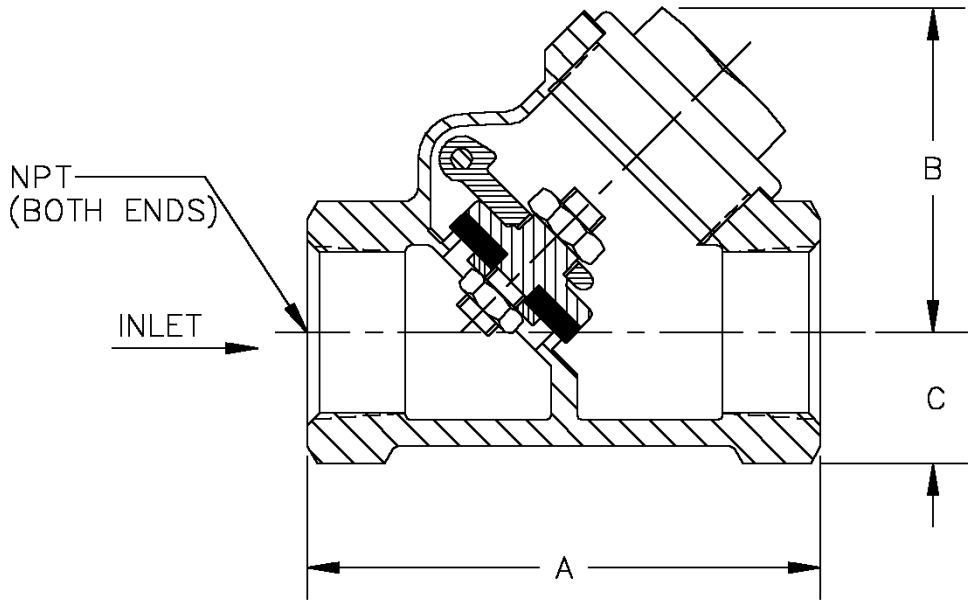

PIPE SIZE NPT	A	B	C
.25 (1/4)	2.13	1.63	.50
.38 (3/8)	2.13	1.63	.50
.50 (1/2)	2.44	1.69	.63
.75 (3/4)	2.94	1.88	.75
1.00 (1)	3.19	2.09	.94

CAD REVISION RECORD – DO NOT REVISE MANUALLY

LTR	DESCRIPTION	BY	DATE
A	REDRAWN ON CAD (ECO 14229)	EK	11-15-93

"THIS DRAWING IS THE PROPERTY OF CLA-VAL CO. AND SAME AND COPIES MADE THEREOF, IF ANY, SHALL BE RETURNED TO IT UPON DEMAND. DELIVERY AND DISCLOSURE HEREOF ARE SOLELY UPON CONDITION THAT THE SAME SHALL NOT BE USED, COPIED OR REPRODUCED, NOR SHALL THE SUBJECT HEREOF BE DISCLOSED IN ANY MANNER TO ANYONE FOR ANY PURPOSE, EXCEPT AS HEREIN AUTHORIZED, WITHOUT PRIOR WRITTEN APPROVAL OF CLA-VAL CO. THIS DRAWING IS SUBMITTED CONFIDENTIALLY AND MAY NOT BE USED IN THE MANUFACTURE OF ANY MATERIAL OR PRODUCT OTHER THAN SUCH MATERIALS AND PRODUCTS FURNISHED TO CLA-VAL CO. WHETHER OR NOT THE EQUIPMENT OR INFORMATION SHOWN HEREON IS PATENTED OR OTHERWISE PROTECTED, FULL TITLE AND COPYRIGHTS, IF ANY, IN AND TO THIS DRAWING AND/OR INFORMATION DELIVERED OR SUBMITTED ARE FULLY RESERVED CLA-VAL CO."

X42N-3

Strainer and Needle Valve Assembly

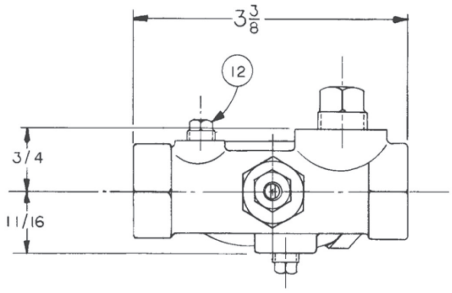

When ordering parts, please specify:

- All nameplate data
- Item Number
- Description

Size	Material
3/8" x 3/8	Bronze

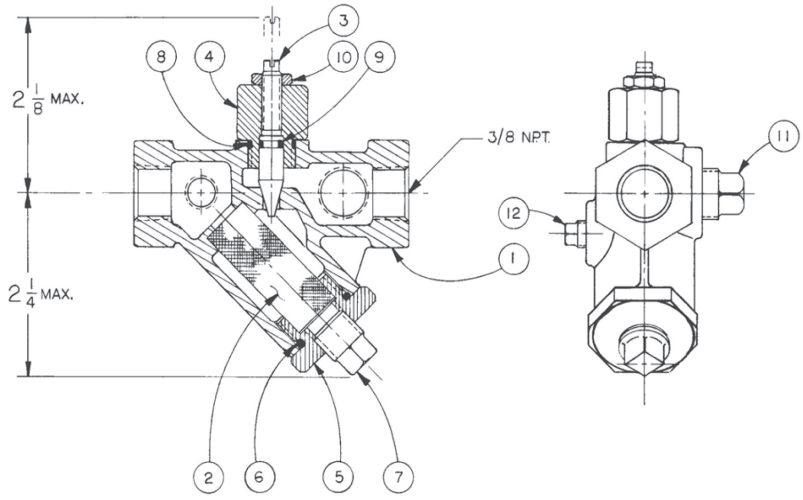

ITEM	DESCRIPTION
1	Body
2	Screen
3	Stem
4	Bonnet
5	Strainer Plug
6	"O" Ring - Plug
7	Plug - Pipe 1/4
8	"O" Ring - Bonnet
9	"O" Ring - Stem
10	Nut, Hex Jam
11	Plug - Pipe 3/8
12	Plug - Plpe 1/8

CLA-VAL P.O. Box 1325 • Newport Beach, CA 92659-0325 • Phone: 949-722-4800 • Fax: 949-548-5441 • E-mail: claval@cla-val.com • Website cla-val.com
© Copyright Cla-Val 2005 Printed in USA Specifications subject to change without notice.

CLA-VAL CO. NEWPORT BEACH, CALIFORNIA

CATALOG NO.	DRAWING NO.	REV.
PP-P/F	67656	N

BELL REDUCERS, PIPE

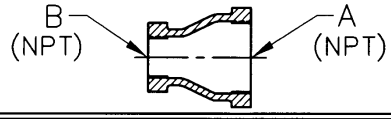

DESIGN		
DRAWN	D.S.	2-28-67
CHK'D	JM	3-3-67
APV'D	JM	3-3-67

CLA-VAL PART NO. AND MATERIAL

BRONZE ASTM B584	STEEL	ST. STEEL	ALUMINUM	MONEL	316 SST	GALVINIZED IRON	SIZE A	SIZE B
67656-01H	67656-22D	67656-43K	67656-64F				1/4	1/8
-02F	-23B	-44H	-65C				3/8	
-03D	-24K	-45E	-66A				1/2	
-04B	-25G	-46C	-67J				3/4	
-05J	-26E	-47A	-68G				1	
-06G	-27C	-48J	-69E		-101C		3/8	1/4
-07E	-28A	-49G	-70C		-99B		1/2	
-08C	-29J	-50E	-71A				3/4	
-09A	-30G	-51C	-72J				1	
-10J	-31E	-52A	-73G	-103F	-97F		1/2	3/8
-11G	-32C	-53J	-74E		-96H		3/4	
-12E	-33A	-54G	-75B				1	
-13C	-34J	-55D	-76K				3/4	1/2
-14A	-35F	-56B	-77H				1	
-15H	-36D	-57K	-78F				1 1/4	
-16F	-37B	-58H	-79D	-85A			1 1/2	
-86J	-87G	-88E	-89C	-90A			2	
-100E							2 1/2	
-17D	-38K	-59F	-80B				1	3/4
-18B	-39H	-60D	-81K				1 1/4	
-19K	-40F	-61B	-82H				1 1/2	
-91J	-92G	-93E	-94C		-102G		2	
-20H	-41D	-62K	-83F				1 1/4	1
-21F	-42B	-63H	-84D				1 1/2	
-98D						-95K	2 1/2	

CAD REVISION RECORD - DO NOT REVISE MANUALLY

LTR	DESCRIPTION	BY	DATE
A-M	SEE REVISION FILE	A.K.	07-19-07
N	REVISED & REDRAWN ON CAD; ADDED PN -103F (ECO 20940)		

"THIS DRAWING IS THE PROPERTY OF CLA-VAL CO. AND SAME AND COPIES MADE THEREOF, IF ANY, SHALL BE RETURNED TO IT UPON DEMAND. DELIVERY AND DISCLOSURE HEREOF ARE SOLELY UPON CONDITION THAT THE SAME SHALL NOT BE USED, COPIED OR REPRODUCED, NOR SHALL THE SUBJECT HEREOF BE DISCLOSED IN ANY MANNER TO ANYONE FOR ANY PURPOSE, EXCEPT AS HEREIN AUTHORIZED, WITHOUT PRIOR WRITTEN APPROVAL OF CLA-VAL CO. THIS DRAWING IS SUBMITTED CONFIDENTIALLY AND MAY NOT BE USED IN THE MANUFACTURE OF ANY MATERIAL OR PRODUCT OTHER THAN SUCH MATERIALS AND PRODUCTS FURNSHED TO CLA-VAL CO. WHETHER OR NOT THE EQUIPMENT OR INFORMATION SHOWN HEREON IS PATENTED OR OTHERWISE PROTECTED, FULL TITLE AND COPYRIGHTS, IF ANY, IN AND TO THIS DRAWING AND/OR INFORMATION DELIVERED OR SUBMITTED ARE FULLY RESERVED CLA-VAL CO."

X141

Cla-Val 2 ½" & 4" Gauge Option

Model X141
4" Pressure Gauge

- **Liquid-Filled**
- **Dual Scale (PSI / BAR)**
- **Long Life Stainless Steel Construction**
- **Tamper-Resistant Design**
- **2 ½" and 4" Diameter Sizes**
- **Isolation Valve Included**

The Cla-Val Model X141 Pressure Gauge Option consists of liquid-filled pressure gauges with Cla-Val Logo installed with ¼" CK2 Bronze Isolation Valves on main valve inlet and outlet. Gauges are waterproof, shock resistant, and fully enclosed with Stainless Steel case and Bronze wetted parts. All gauges have dual scale (PSI/BAR) and 1.5% F.S. accuracy with 1/4" NPT bottom connection. 2 ½" Diameter Dial supplied with 6" and smaller valves. 4" Diameter Dial supplied with 8" and larger valves. Available installed on new valves and must be specified on customer Purchase Order. Other materials available consult factory.

Available Pressure Ranges

X141 Gauge Assembly for 6" and smaller valves (2 1/2" Diameter Dial)

Pressure Range*	Part Number
0 - 60 psi	20534301 A
0 - 100 psi	20534302K
0 - 160 psi	20534311J
0 - 200 psi	20534303J
0 - 300 psi	20534304H
0 - 400 psi	20534305G

X141 Gauge Assembly for 8" and larger valves (4" Diameter Dial)

Pressure Range*	Part Number
0 - 60 psi	20534306F
0 - 100 psi	20534307E
0 - 200 psi	20534308D
0 - 300 psi	20534309C
0 - 400 psi	20534310K

Typical Installation of X141

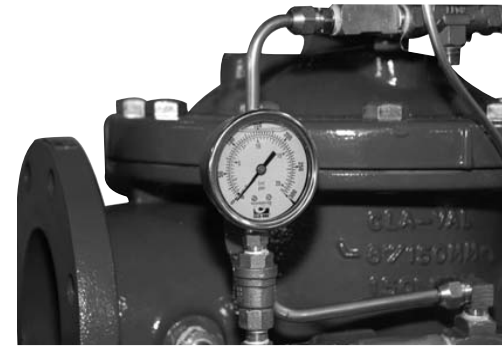

Typical Installation of X141 Both Gauges Installed

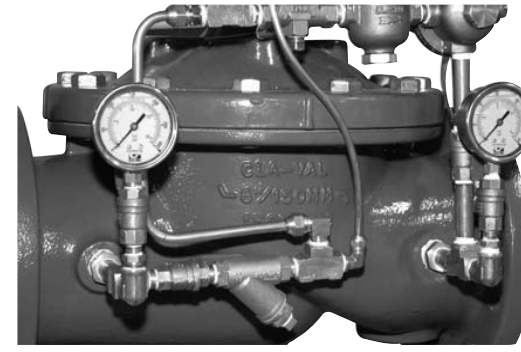

*Specify desired pressure range and valve location (inlet or outlet) on order.

CLA-VAL P.O. Box 1325 • Newport Beach, CA 92659-0325 • Phone: 949-722-4800 • Fax: 949-548-5441 • E-mail: claval@cla-val.com • Website cla-val.com
©Copyright Cla-Val 2011 Printed in USA Specifications subject to change without notice.

X102F Hydraulic Flow Limiter Adjustment

Hydraulically limits Hytrol valve open position. For flowing pilot systems.

4" And Smaller Main Valve MUST HAVE High Capacity Cover Bearing

Approximate number of turns Clockwise (IN) from full OPEN position

Valve Size (in.)		Part Number	Valve	80%	60%	40%	20%
(100 Series)	(600 Series)	(BS)	Stroke	Open	Open	Open	Open
2 1/2		75215E	0.714	2.3	4.6	6.9	9.2
3	4	75215E	0.835	2.6	5.4	8	10.7
4	6	62405G	1.091	3.5	7	10.5	14
6	8	62404K	1.584	5	10.2	15.2	20.3
8	10	62385A	2.242	7.2	14.4	21.6	28.7
10	12	63936K	2.7	8.6	17.3	26	34.6
12	16	63936K	3.343	10.7	21.4	32.1	42.8
14		90723J	4.084	13.1	26.2	39.2	52.3
16	24	90724G	4.584	14.7	29.3	44	58.7
18		9068201E	5.182	16.6	33.2	49.7	66.4

FIRST Step: Use screwdriver to fit upper tube slot, adjust counterclockwise (OUT) until it stops.
This is to ensure starting adjustment at control full open position.

Factory set to all the way out = fully open main valve
2 ½ through 8” have 32 total turns. Adjusts 2"
10” & 12” have 48 total turns. Adjusts 3"
14”, 16” & 18" have 80 total turns. Adjusts 5"
For all sizes: Adjusting thread pitch is 16 turns per inch

Instructions Example: Standard on 52-03/652-03

Cla-Val Product Identification

How to Order

Proper Identification

For ordering repair kits, replacement parts, or for inquiries concerning valve operation, it is important to properly identify Cla-Val products already in service by including all nameplate data with your inquiry. Pertinent product data includes valve function, size, material, pressure rating, end details, type of pilot controls used and control adjustment ranges.

Identification Plates

For product identification, cast-in body markings are supplemented by identification plates as illustrated on this page. The plates, depending on type and size of product, are mounted in the most practical position. **It is extremely important that these identification plates are not painted over, removed, or in any other way rendered illegible.**

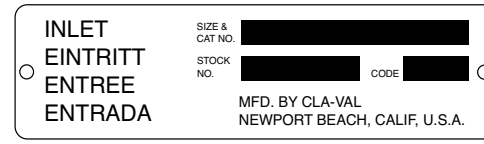

This brass plate appears on valves sized $2^1/_2$" and larger and is located on the top of the inlet flange.

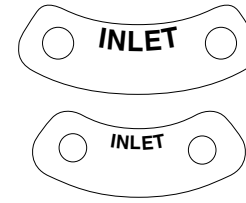

These two brass plates appear on $^3/_8$", $^1/_2$", and $^3/_4$" size valves and are located on the valve cover.

This brass plate appears on altitude valves only and is found on top of the outlet flange.

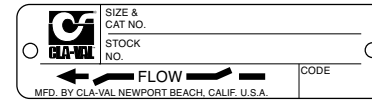

These two brass plates appear on threaded valves 1" through 3" size or flanged valves 1" through 2". It is located on only one side of the valve body.

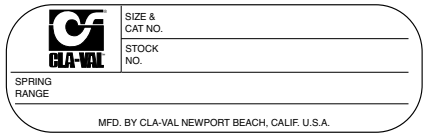

This tag is affixed to the cover of the pilot control valve. The adjustment range appears in the spring range section.

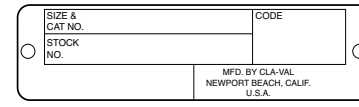

This brass plate is used to identify pilot control valves. The adjustment range is stamped into the plate.

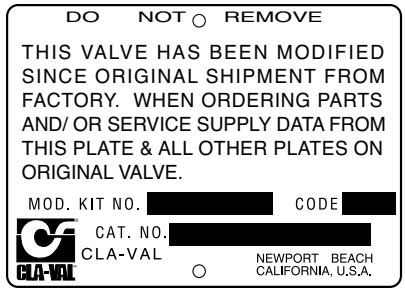

This aluminum plate is included in pilot system modification kits and is to be wired to the new pilot control system after installation.

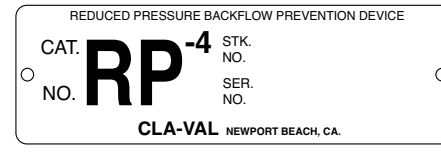

This brass plate is used on our backflow prevention assemblies. It is located on the side of the Number Two check (2" through 10"). The serial number of the assembly is also stamped on the top of the inlet flange of the Number One check.

HOW TO ORDER

Because of the vast number of possible configurations and combinations available, many valves and controls are not shown in published product and price lists. For ordering information, price and availability on product that are not listed, please contact your local Cla-Val office or our factory office located at:

P. O. Box 1325
Newport Beach, California 92659-0325
(949) 722-4800
FAX (949) 548-5441

SPECIFY WHEN ORDERING

- Model Number
- Globe or Angle Pattern
- Adjustment Range (As Applicable)
- Valve Size
- Threaded or Flanged
- Body and Trim Materials
- Optional Features
- Pressure Class

UNLESS OTHERWISE SPECIFIED

- Globe or angle pattern are the same price
- Ductile iron body and bronze trim are standard
- X46 Flow Clean Strainer or X43 “Y” Strainer are included
- CK2 Isolation Valves are included in price on 4" and larger valve sizes (6" and larger on 600 Series)

LIMITED WARRANTY

Automatic valves and controls as manufactured by Cla-Val are warranted for three years from date of shipment against manufacturing defects in material and workmanship that develop in the service for which they are designed, provided the products are installed and used in accordance with all applicable instructions and limitations issued by Cla-Val. Electronic components manufactured by Cla-Val are warranted for one year from the date of shipment.

We will repair or replace defective material, free of charge, that is returned to our factory, transportation charges prepaid, if upon inspection, the material is found to have been defective at time of original shipment. This warranty is expressly conditioned on the purchaser’s providing written notification to Cla-Val immediate upon discovery of the defect.

Components used by Cla-Val but manufactured by others, are warranted only to the extent of that manufacturer’s guarantee.

This warranty shall not apply if the product has been altered or repaired by others, Cla-Val shall make no allowance or credit for such repairs or alterations unless authorized in writing by Cla-Val.

DISCLAIMER OF WARRANTIES AND LIMITATIONS OF LIABILITY

The foregoing warranty is exclusive and in lieu of all other warranties and representations, whether expressed, implied, oral or written, including but not limited to any implied warranties or merchantability or fitness for a particular purpose. All such other warranties and representations are hereby cancelled.

Cla-Val shall not be liable for any incidental or consequential loss, damage or expense arising directly or indirectly from the use of the product. Cla-Val shall not be liable for any damages or charges for labor or expense in making repairs or adjustments to the product. Cla-Val shall not be liable for any damages or charges sustained in the adaptation or use of its engineering data and services. No representative of Cla-Val may change any of the foregoing or assume any additional liability or responsibility in connection with the product. The liability of Cla-Val is limited to material replacements F.O.B. Newport Beach, California.

TERMS OF SALE

ACCEPTANCE OF ORDERS

All orders are subject to acceptance by our main office at Newport Beach, California.

CREDIT TERMS

Credit terms are net thirty (30) days from date of invoice.

PURCHASE ORDER FORMS

Orders submitted on customer’s own purchase order forms will be accepted only with the express understanding that no statements, clauses, or conditions contained in said order form will be binding on the Seller if they in any way modify the Seller’s own terms and conditions of sales.

PRODUCT CHANGES

The right is reserved to make changes in pattern, design or materials when deemed necessary, without prior notice.

PRICES

All prices are F.O.B. Newport Beach, California unless expressly stated otherwise on our acknowledgement of the order. Prices are subject to change without notice. The prices at which any order is accepted are subject to adjustment to the Seller’s price in effect at the time of shipment. Prices do not include sales, excise, municipal, state or any other Government taxes. Minimum order charge $100.00.

RESPONSIBILITY

We will not be responsible for delays resulting from strikes, accidents, negligence of carriers, or other causes beyond our control. Also, we will not be liable for any unauthorized product alterations or charges accruing there from.

RISK

All goods are shipped at the risk of the purchaser after they have been delivered by us to the carrier. Claims for error, shortages, etc., must be made upon receipt of goods.

EXPORT SHIPMENTS

Export shipments are subject to an additional charge for export packing.

RETURNED GOODS

1. Customers must obtain written approval from Cla-Val prior to returning any material.
2. Cla-Val reserves the right to refuse the return of any products.
3. Products more than six (6) months old cannot be returned for credit.
4. Specially produced, non-standard models cannot be returned for credit.
5. Rubber goods such as diaphragms, discs, o-rings, etc., cannot be returned for credit, unless as part of an unopened vacuum sealed repair kit which is less than six months old.
6. Goods authorized for return are subject to a 35% ($100 minimum) restocking charge and a service charge for inspection, reconditioning, replacement of rubber parts, retesting, repainting and repackaging as required.
7. Authorized returned goods must be packaged and shipped prepaid to Cla-Val, 1701 Placentia Avenue, Costa Mesa, California 92627.

CLA-VAL®

E-Product I.D. (R-3/2011)

CLA-VAL
PO Box 1325 Newport Beach CA 92659-0325
Phone: 949-722-4800 • Fax: 949-548-5441

CLA-VAL CANADA
4687 Christie Drive
Beamsville, Ontario
Canada L0R 1B4
Phone: 905-563-4963
Fax: 905-563-4040

CLA-VAL EUROPE
Chemin dés Mesanges 1
CH-1032 Romanel/
Lausanne, Switzerland
Phone: 41-21-643-15-55
Fax: 41-21-643-15-50

www.cla-val.com

©COPYRIGHT CLA-VAL 2011 Printed in USA
Specifications subject to change without notice.

Represented By:

CLA-VAL

—MODEL— **REPAIR KITS**

Model 100-01 Hytrol Main Valve

BUNA-N MATERIAL				
	RUBBER KIT	REPAIR KIT	REBUILD KIT	STUD & NUT KIT
	STOCK NO.	STOCK NO.	STOCK NO.	STOCK NO.
3/8”	9169801K		21176614B	21176633J
1/2”	9169802H	21176602F	21176615A	21176634H
3/4”	9169802H	21176602F	21176615A	21176634H
1” Non-Guided	9169803F	21176601G	21176616K	21176636F
1”	9169804D	21176603E	21176617J	21176636F
1 1/4”	9169804D	21176603E	21176617J	21176636F
1 1/2”	9169804D	21176603E	21176617J	21176636F
2”	9169805A	21176608K	21176618H	21176637E
2 1/2”	9169811J	21176609J	21176619G	21176638D
3”	9169812G	21176604D	21176620D	21176639C
4”	9169813E	21176605C	21176621C	21176640K
6”	9169815K	21176606B	21176622B	21176641J
8”	9817901D	21176607A	21176623A	21176642H
10”	9817902B	21176610F	21176624K	21176643G
12”	9817903K	21176611E	21176625J	21176644F
14”	9817904H	21176612D	21176626H	21176645E
16”	9817905E	21176613C	21176627G	21176645E

Model 100-20 Hytrol Main Valve

BUNA-N MATERIAL				
	RUBBER KIT	REPAIR KIT	REBUILD KIT	STUD & NUT KIT
	STOCK NO.	STOCK NO.	STOCK NO.	STOCK NO.
3”	9169805A	21176608K	21176618H	21176637E
4”	9169812G	21176604D	21176620D	21176639C
6”	9169813E	21176605C	21176621C	21176640K
8”	9169815K	21176606B	21176622B	21176641J
10”	9817901D	21176607A	21176623A	21176642H
12”	9817902B	21176610F	21176624K	21176643G
14”	9817903K	21176611E	21176625J	21176644F
16”	9817903K	21176611E	21176625J	21176644F

Consult factory for larger sizes

Rubber Kit Includes: Diaphragm, Disc, Spacer Washers

Repair Kit Includes: Diaphragm, Disc, Spacer Washers, Epoxy Coated Disc Retainer, Epoxy Coated Diaphragm Washer, Protective Washer

Rebuild Kit Includes: Diaphragm, Disc, Spacer Washers, Epoxy Coated Disc Retainer, Epoxy Coated Diaphragm Washer, Protective Washer, Stainless Steel Bolts & Washers (6" & Below), Stainless Steel Studs, Nuts, & Washers (8" & Above), Stem, Stem Nut, Disc Guide

Stud & Nut Kit Includes: Stainless Steel Bolts & Washers (6" & Below), Stainless Steel Studs, Nuts, & Washers (8" & Above)

Repair Kits for 100-02/100-21 Powertrol and 100-03/100-22 Powercheck Main Valves

For: Powertrol and Powercheck Main Valves—**150 Pressure Class Only**

Includes: Diaphragm, Disc (or Disc Assembly) and O-rings and full set of spare Spacer Washers.

Valve Size	Kit Stock Number 100-02	Valve Size	Kit Stock Number	
			100-02 & 100-03	100-21 & 100-22
⅜"	9169901H	2½"	9169910J	N/A
½" & ¾"	9169902F	3"	9169911G	9169905J
1"	9169903D	4"	9169912E	9169911G
1¼" & 1½"	9169904B	6"	9169913C	9169912E
2"	9169905J	8"	99116G	9169913C
		10"	9169939H	99116G
		12"	9169937B	9169939H

Larger Sizes: Consult Factory.

Repair Kits for 100-04/100-23 Hy-Check Main Valves

For: Hy-Check Main Valves—**150 Pressure Class Only**

Includes: Diaphragm, Disc and O-Rings and full set of spare Spacer Washers.

Valve Size	Kit Stock Number		Valve Size	Kit Stock Number	
	100-04	100-23		100-04	100-23
4"	20210901B	N/A	12"	20210905H	20210904J
6"	20210902A	20210901B	14"	20210906G	N/A
8"	20210903K	20210902A	16"	20210907F	20210905H
10"	20210904J	20210903K	20"	N/A	20210907F
			24"	N/A	20210907F

Larger Sizes: Consult Factory.

Repair Kits for Pilot Control Valves (In Standard Materials Only)

Includes: Diaphragm, Disc (or Disc Assembly), O-Rings, Gaskets or spare Screws as appropriate.

BUNA-N® (Standard Material)				**VITON** (For KB Controls)	
Pilot Control	Kit Stock Number	Pilot Control	Kit Stock Number	Pilot Control	Kit Stock Number
CDB	9170006C	CFM-9	12223E	CDB-KB	9170012A
CDB-30	9170023H	CRA (w/bucking spring)	9170001D	CRA-KB	N/A
CDB-31	9170024F	CRD (w/bucking spring)	9170002B	CRD-KB (w/bucking spring)	9170008J
CDB-7	9170017K	CRD (no bucking spring)	9170003K	CRL-KB	9170013J
CDH-2	18225D	CRD-18	20275401K	CDHS-2BKB	9170010E
CDHS-2	44607A	CRD-22	98923G	CDHS-2FKB	9170011C
CDHS-2B	9170004H	CRL (55F, 55L)	9170007A	CDHS-18KB (no bucking spring)	9170009G
CDHS-2F	9170005E	CRL60/55L-60	9170033G	102C-KB	1726202D
CDHS-3C-A2	24657K	CRL60/55L60 1"	9170042H		
CDHS-8A	2666901A	CRL-4A	43413E		
CDHS-18	9170003K	CRL-5 (55B)	65755B		
CDS-4	9170014G	CRL-5A (55G)	20666E		
CDS-5	14200A	CRL-18	20309801C		
CDS-6	20119301A	Universal CRL	9170041K		
CDS-6A	20349401C	CV	9170019F		
CFCM-M1	1222301C	X105L (O-ring)	00951E	Buna-N®	
CFM-2	12223E	102B-1	1502201F		
CFM-7	1263901K	102C-2	1726201F	CRD Disc Ret. (Solid)	C5256H
CFM-7A	1263901K	102C-3	1726201F	CRD Disc Ret. (Spring)	C5255K

Repair Assemblies (In Standard Materials Only)

Control	Description	Stock Number
CF1-C1	Pilot Assembly Only	89541H
CF1-CI	Complete Float Control less Ball and Rod	89016A
CFC2-C1	Disc, Distributor and Seals	2674701E
CSM 11-A2-2	Mechanical Parts Assembly	97544B
CSM 11-A2-2	Pilot Assembly Only	18053K
33A 1"	Complete Internal Assembly and Seal	2036030B
33A 2"	Complete Internal Assembly and Seal	2040830J

When ordering, please give complete nameplate data of the valve and/or control being repaired. MINIMUM ORDER CHARGE APPLIES

© Copyright Cla-Val 2018 Printed in USA Specifications subject to change without notice.